SPARKS BELTING COMPANY

Technical Information

1. Belt S.06 Pitch 6.25 mm (.25”)
2. Belt S.12 Pitch 12.5 mm (.49”)
3. Belt S.25 Pitch 25 mm (.98”)
4. Belt S.50 Pitch 50 mm (1.97”)
5. Belt S.75 Pitch 75 mm (2.95”)
6. S.25 Radius belts. Pitch 25 mm (.98”)
7. S.50 Radius belts. Pitch 50 mm (1.97”)
8. Accessories
9. Construction and Installation Instructions

SPARKS BELTING COMPANY

1.Belt S.06

Pitch 6.25 mm (.25”)

S.06-401

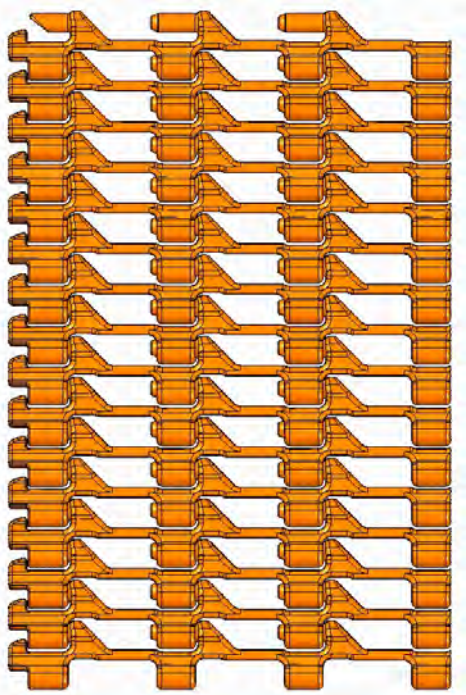

PAT. PENDING

Belt Data		
Materials	Max. belt pull Lb/ft of width	Belt weight lb/square ft
Polyacetal (POM)	Min. 165	.57

Belt surface:	Open belt with a smooth surface.
Open area:	40%. Biggest opening 4 x 8 mm (.16 x .31).
Strength:	Ideal choice for light transportation.
Material/colour:	POM / Natural
Cleanability:	Excellent. FSIS
Accessories:	
Application:	Transport of products that require a very small transfer. Will run over a ¼" nosebar.
Standard widths:	Increments of 40mm (1.57), **starting** at 120mm (4.72)

Sprocket Data								
No. of teeth	A= Outside diameter	B= Pitch diameter	C= Inside-diameter		Round bore		Square bore	
					mm	in.	mm	in.
20	44 (1.73)	39 (1.54)	35 (1.38)		20			
36	74 (2.91)	69 (2.72)	65 (2.56)		20/25		25	
48	96 (3.78)	91 (3.58)	87 (3.43)		20/25		25/40	

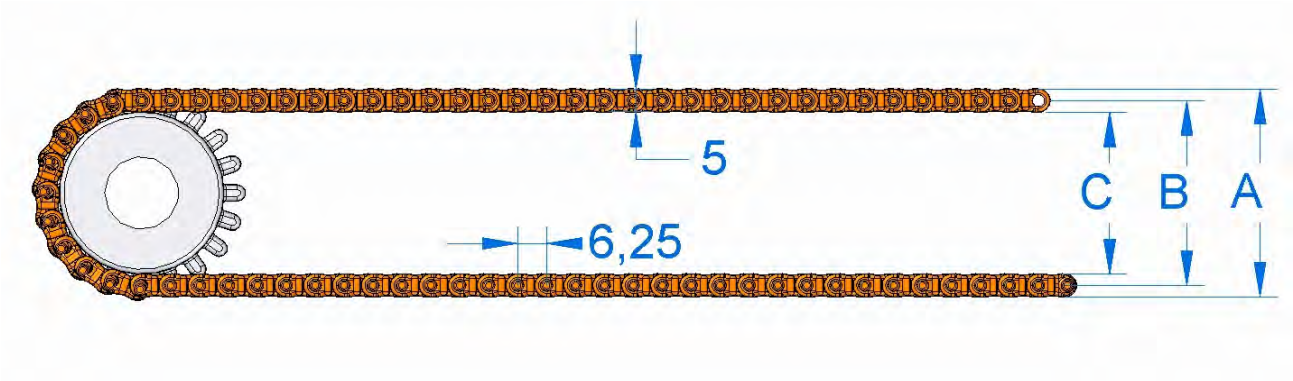

2. Belt S.12

Pitch 12.5 mm (.49”)

S.12-401

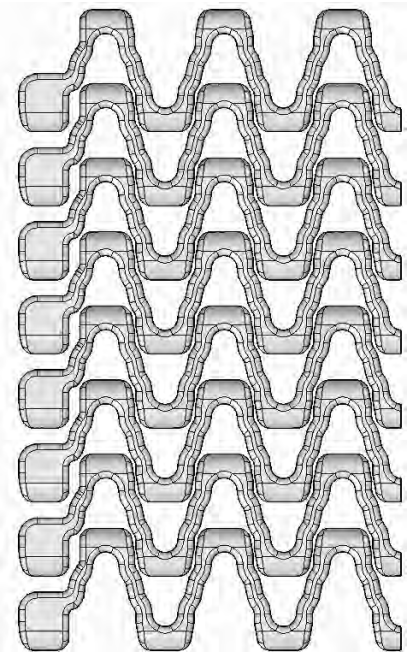

Belt Data		
Materials	Max. belt pull Lb/ft of width	Belt weight lb/square foot
Polyethylene (PE)	400	.71
Polypropylene (PP)	535	.71
Polyacetal (POM)	975	1.00

Belt surface:	Open belt with a smooth surface.
Open area:	40%. Biggest opening 6 x 8 mm (.24 x .31)
Strength:	Ideal choice for light transportation.
Material/colour:	PE/nat, PP/white and grey. POM/blue
Cleanability:	Excellent. FSIS
Accessories:	
Application:	Cooling belt for small nose bar (14mm minimum)
Standard widths:	Increments of 20 mm (.79), e.g. 100 (3.94), 120 (4.72), etc. Special widths available on request
Food approved	

Sprocket Data								
No. of teeth	A= Outside diameter	B= Pitch diameter	C= Inside-diameter	Hub width:	Round bore		Square bore	
					mm	in.	mm	in.
10	50 (1.97)	42 (1.65)	33 (1.30)	16 (.63)	20	.75		
19	84 (3.31)	76 (2.99)	67 (2.64)	16 (.63)	20/25/30/40	1	25/40	1½
24	104 (4.09)	96 (3.78)	87 (3.43)	16 (.63)	20/25/30/40	1	25/40	1½
28	120 (4.72)	112 (4.41)	103 (4.05)	16 (.63)	20/25/30/40	1	25/40	1½

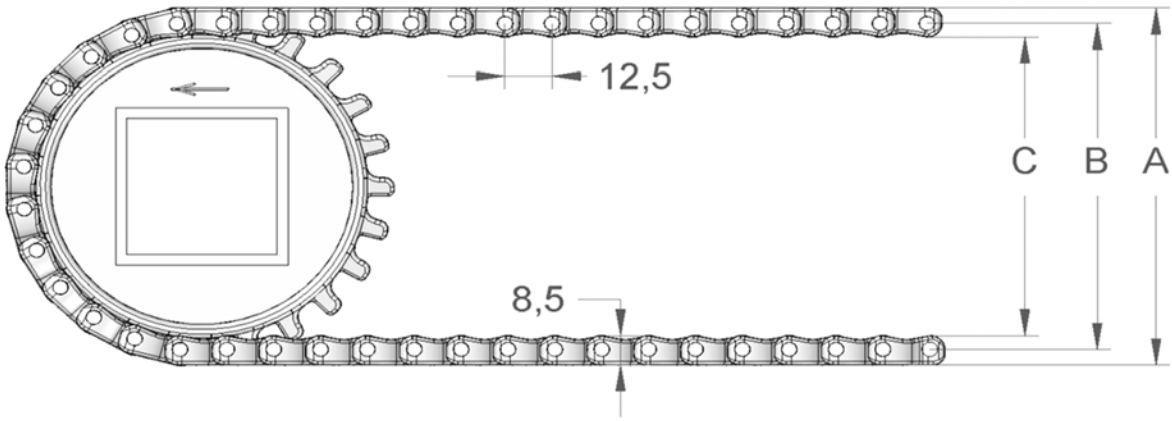

S.12-406

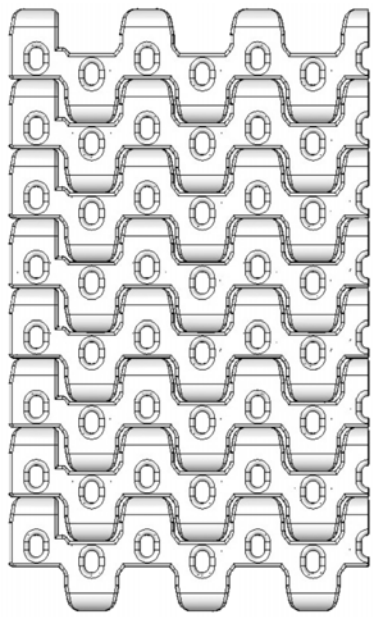

Belt Data		
Materials	Max. belt pull Lb/ft of width	Belt weight lb/square foot
Polyethylene (PE)	400	.92
Polypropylene (PP)	535	.92
Polyacetal (POM)	975	1.22

Belt surface:	Perforated flat top.
Open area:	8%. Biggest opening 4 x 2,5 mm (.16 x .10)
Strength:	Ideal choice for light transportation.
Material/colour:	PE/nat, PP/white and grey. POM/blue
Cleanability:	Excellent. FSIS
Accessories:	25 mm (.98) flights, friction top.
Application:	Cooling belt for small nose bar (14mm minimum)
Standard widths:	Increments of 20 mm (.79), e.g. 100 (3.94), 120 (4.72), etc. Special widths available on request

Food approved

Sprocket Data								
No. of teeth	A= Outside diameter	B= Pitch diameter	C= Inside-diameter	Hub width:	Round bore		Square bore	
					mm	in.	mm	in.
10	50 (1.97)	42 (1.65)	33 (1.30)	16 (.63)	20	.75		
19	84 (3.31)	76 (2.99)	67 (2.64)	16 (.63)	20/25/30/40	1	25/40	1½
24	104 (4.09)	96 (3.78)	87 (3.43)	16 (.63)	20/25/30/40	1	25/40	1½
28	120 (4.72)	112 (4.41)	103 (4.05)	16 (.63)	20/25/30/40	1	25/40	1½

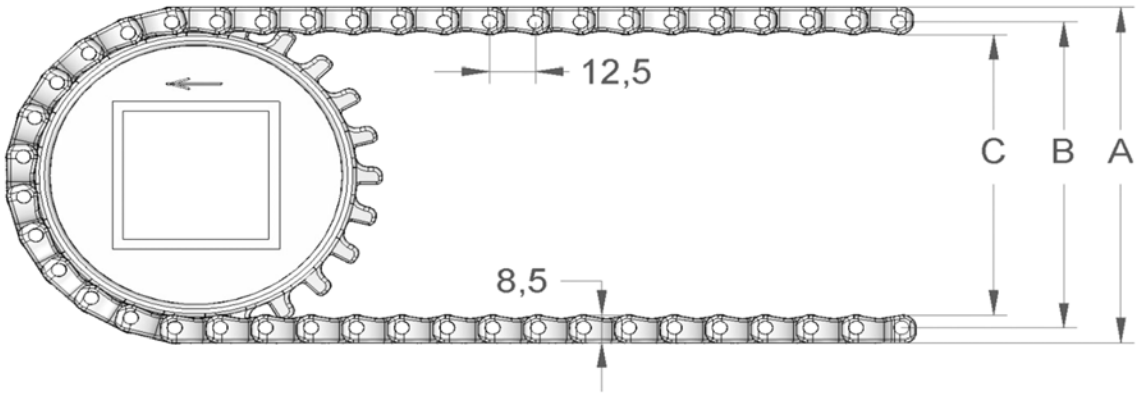

S.12-408

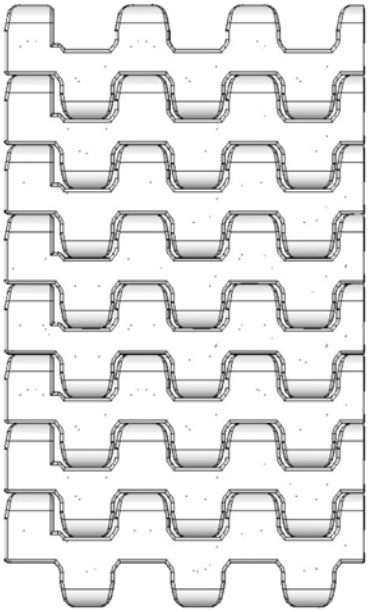

Belt Data		
Materials	Max. belt pull Lb/ft of width	Belt weight lb/square foot
Polyethylene (PE)	400	.92
Polypropylene (PP)	535	.92
Polyacetal (POM)	975	1.22

Belt surface:	Flat top.
Open area:	Closed.
Strength:	Ideal choice for light transportation.
Material/colour:	PE/nat, PP/white and grey. POM/blue
Cleanability:	Excellent. FSIS
Accessories:	25 mm (.98) flights, friction top.
Application:	Cooling belt for small nose bar (14mm minimum)
Standard widths:	Increments of 20 mm (.79), e.g. 100 (3.94), 120 (4.72), etc. Special widths available on request

Food approved

Sprocket Data								
No. of teeth	A= Outside diameter	B= Pitch diameter	C= Inside-diameter	Hub width:	Round bore		Square bore	
					mm	in.	mm	in.
10	50 (1.97)	42 (1.65)	33 (1.30)	16 (.63)	20	.75		
19	84 (3.31)	76 (2.99)	67 (2.64)	16 (.63)	20/25/30/40	1	25/40	1½
24	104 (4.09)	96 (3.78)	87 (3.43)	16 (.63)	20/25/30/40	1	25/40	1½
28	120 (4.72)	112 (4.41)	103 (4.05)	16 (.63)	20/25/30/40	1	25/40	1½

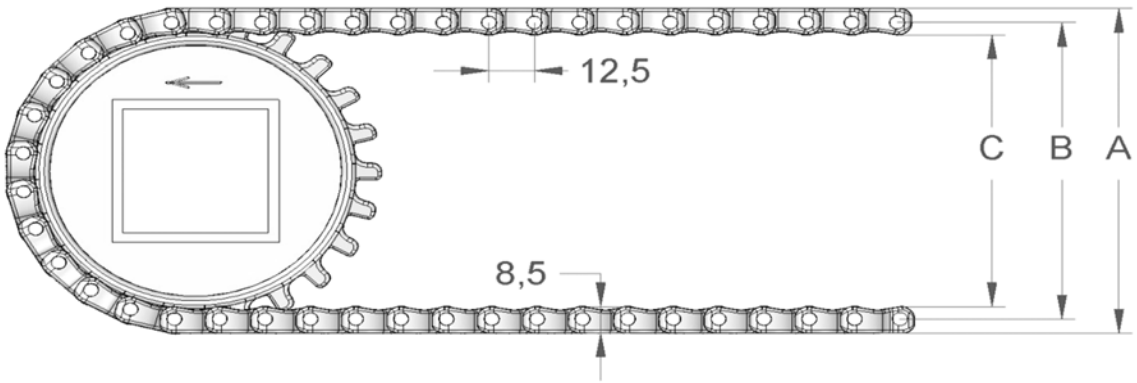

S.12-408F (friction)

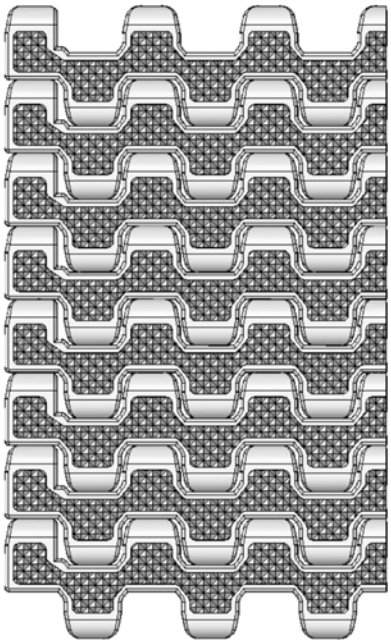

Belt Data		
Materials	Max. belt pull Lb/ft of width	Belt weight lb/square foot
Copolymer:	500	1.22

Belt surface:	Flat top with friction surface.
Open area:	Closed.
Strength:	Ideal choice for light transportation.
Colour:	nat/white.
Cleanability:	Excellent. FSIS
Accessories:	25 mm (.98) flights
Application:	Transport of goods on a slightly inclined conveyor.
Standard widths:	Increments of 20 mm (.79), e.g. 100 (3.94), 120 (4.72), etc. Special widths available on request

Food approved

Sprocket Data								
No. of teeth	A= Outside diameter	B= Pitch diameter	C= Inside-diameter	Hub width:	Round bore		Square bore	
					mm	in.	mm	in.
10	56 (2.20)	42 (1.65)	33 (1.30)	16 (.63)	20	.75		
19	90 (3.54)	76 (2.99)	67 (2.64)	16 (.63)	20/25/30/40	1	25/40	1½
24	110 (4.33)	96 (3.78)	87 (3.43)	16 (.63)	20/25/30/40	1	25/40	1½
28	126 (4.96)	112 (4.41)	103 (4.05)	16 (.63)	20/25/30/40	1	25/40	1½

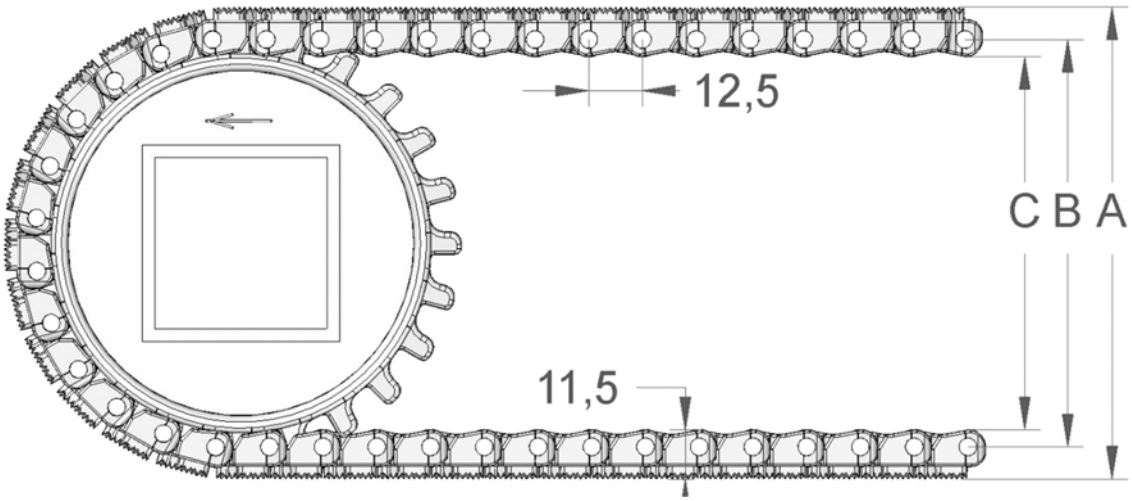

S.12-448

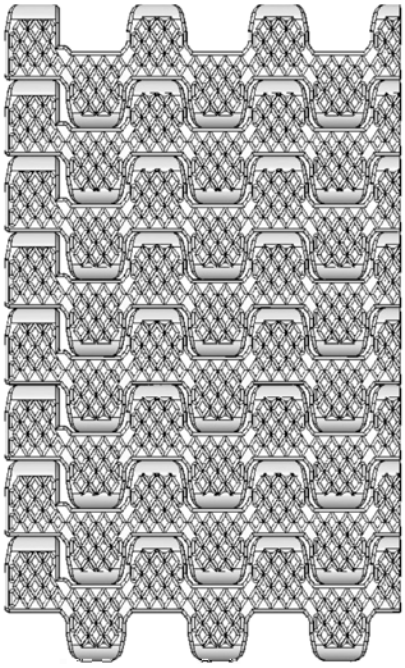

Belt Data		
Materials	Max. belt pull Lb/ft of width	Belt weight lb/square foot
Polyethylene (PE)	400	.92
Polypropylene (PP)	535	.92
Polyacetal (POM)	975	1.22

Belt surface:	Closed top with an inverted diamond pattern
Open area:	Closed.
Strength:	Ideal choice for light transportation.
Material/colour:	PE/nat and PP/white
Cleanability:	Excellent. FSIS
Accessories:	25 mm (.98) flights, friction top.
Application:	Proofing belt for raw dough. The inverted diamond pattern ensures easy product release.
Standard widths:	Increments of 20 mm (.79), e.g. 100 (3.94), 120 (4.72), etc. Special widths available on request

Food approved

Sprocket Data								
No. of teeth	A= Outside diameter	B= Pitch diameter	C= Inside-diameter	Hub width:	Round bore		Square bore	
					mm	in.	mm	in.
10	50 (1.97)	42 (1.65)	33 (1.30)	16 (.63)	20	.75		
19	84 (3.31)	76 (2.99)	67 (2.64)	16 (.63)	20/25/30/40	1	25/40	1½
24	104 (4.09)	96 (3.78)	87 (3.43)	16 (.63)	20/25/30/40	1	25/40	1½
28	120 (4.72)	112 (4.41)	103 (4.05)	16 (.63)	20/25/30/40	1	25/40	1½

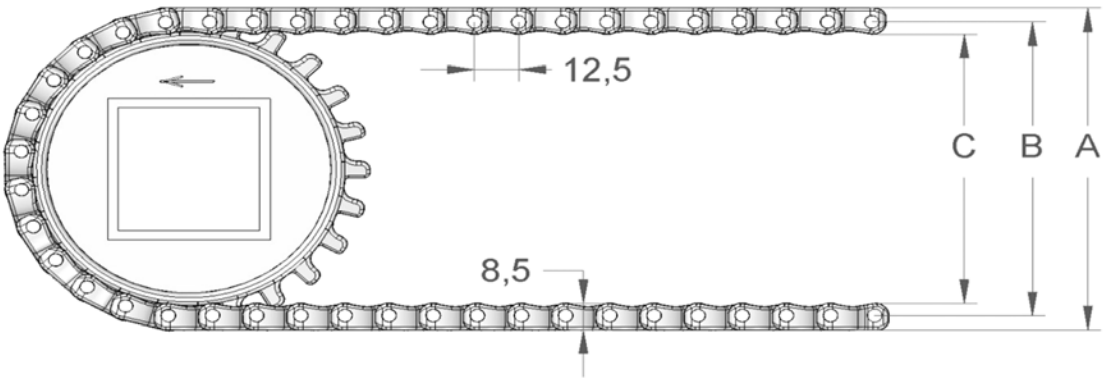

SPARKS BELTING COMPANY

3. Belt S.25

Pitch 25 mm. (.98”)

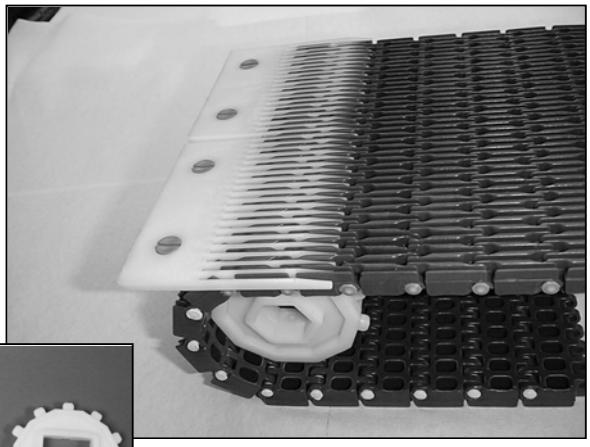

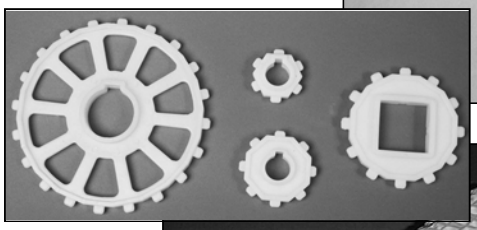

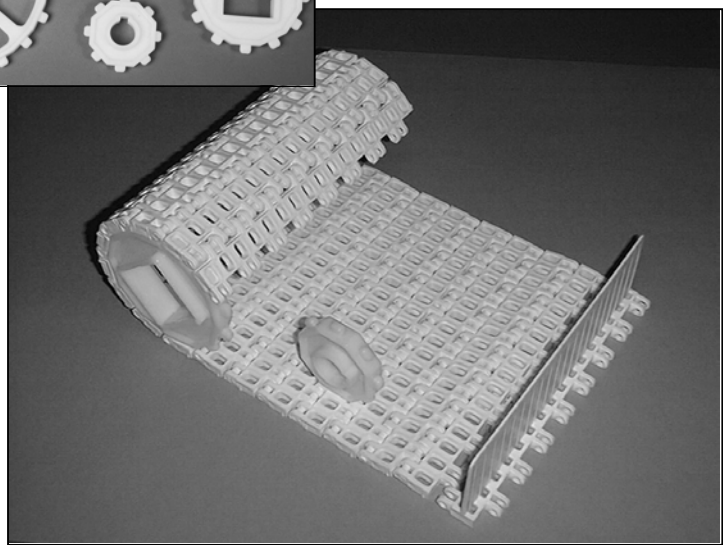

S.25-100

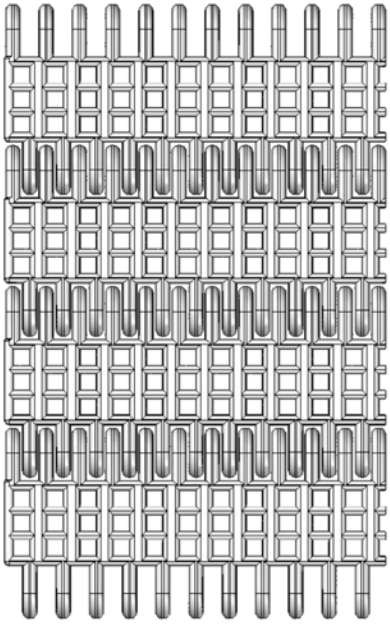

Belt Data		
Materials	Max. belt pull Lb/ft of width	Belt weight lb/square foot
Polyethylene (PE)	360	.92
Polypropylene (PP)	500	.92
Polyacetal (POM)	840	1.22

Belt surface:	Open belt with a smooth surface.
Open area:	20 %. Biggest opening 3 x 3 mm (.12 x .12)
Strength:	Ideal choice for light transportation.
Material/colour:	PE/nat, PP/white and grey. POM/blue
Cleanability:	Good.
Accessories:	5 (.20), 25 (.98) and 50 mm (1.97) flights, 25 (.98) and 50 mm (1.97) side guards. 25 (.98) and 50 mm (1.97) friction flights.
Application:	Catering, dairy, snacks and seafood industry.
Standard widths:	Increments of 6 mm (.24), e.g. 100 (3.93), 106 mm (4.17) etc

Food approved

Sprocket Data								
No. of teeth	A= Outside diameter	B= Pitch diameter	C= Inside diameter	Hub width:	Round bore		Square bore	
					mm	in.	mm	in.
6	59 (2.32)	50 (1.97)	41 (1.61)	40 (1.57)	20			
12	106 (4.17)	97 (3.82)	88 (3.46)	40 (1.57)	20/25/30/40	1	40	1½
20	172 (6.69)	161 (6.34)	152 (5.98)	40 (1.57)	25/30/40	1	40/60	1½/2½

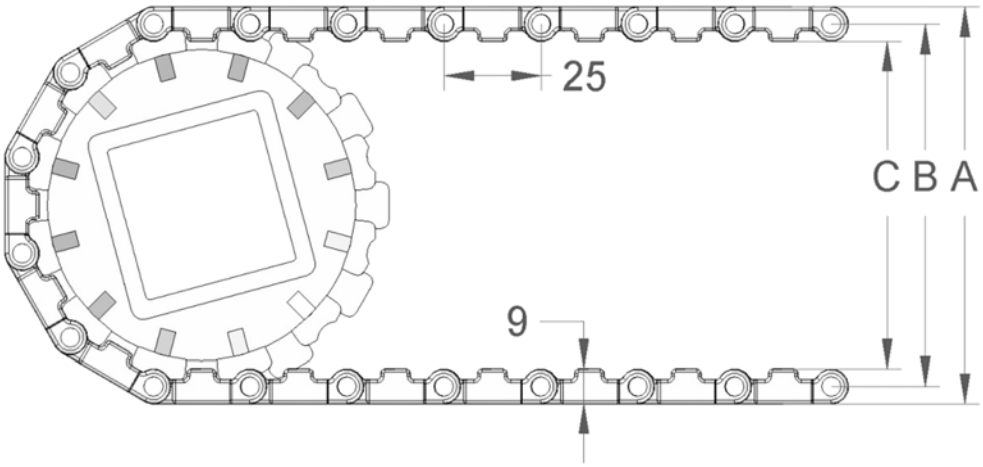

S.25-400

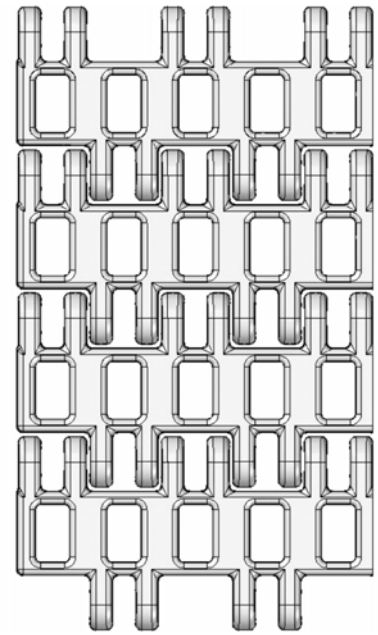

Belt Data		
Materials	Max. belt pull Lb/ft of width	Belt weight lb/square foot
Polyethylene (PE)	425	1.0
Polypropylene (PP)	710	1.0
Polyacetal (POM)	1000	1.43

Belt surface:	Open belt with a smooth surface.
Open area:	29 %. Biggest opening 6 x 10 mm (.24 x .39)
Strength:	Ideal for medium weight transportation..
Material/colour:	PE/nat, PP/white and grey. POM/blue
Cleanability:	Excellent. FSIS
Accessories:	5 (.20), 25 (.98) and 50 mm (1.97) flights, 25 (.98) and 50 mm (1.97) side guards., friction top.
Application:	Seafood, red meat, vegetables, bakery and food industry in general. Even cooling/freezing and washing.
Standard widths:	Increments of 25 mm (.98), e.g. 100 (3.93), 125 mm (4.92) etc Special widths available on request
Food approved	

Sprocket Data								
No. of teeth	A= Outside diameter	B= Pitch diameter	C= Inside diameter	Hub width:	Round bore		Square bore	
					mm	in.	mm	in.
6	54 (2.13)	45 (1.77)	36 (1.42)	20 (.79)	20			
8	70 (2.76)	61 (2.40)	52 (2.05)	20 (.79)	20/25	1	25	1
12	104 (4.09)	95 (3.74)	86 (3.39)	20 (.79)	20/25/30/40	1/1¼	25/40	1½
20	169 (6.65)	160 (6.30)	151 (5.94)	35 (1.38)	25/30/40	1/1¼	25/40/60	1½/2½

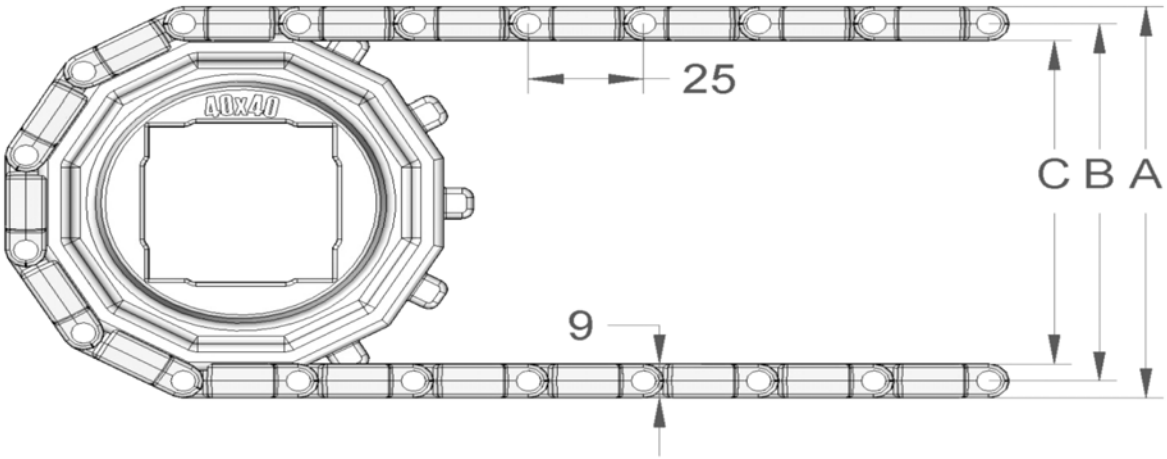

S.25-400F (friction)

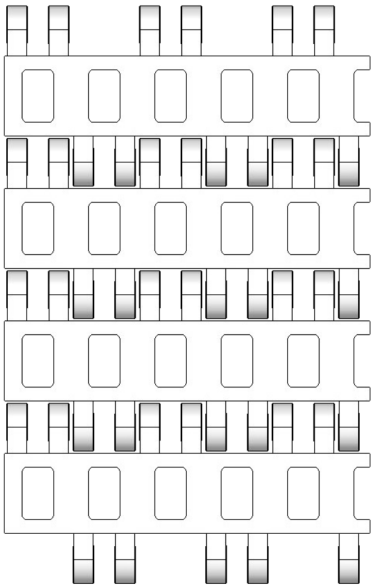

Belt Data		
Materials	Max. belt pull Lb/ft of width	Belt weight lb/square foot
Copolymer:	600	1.43

Belt surface:	Friction surface.
Open area:	29 %. Biggest opening 6 x 10 mm (.24 x .39)
Strength:	Ideal for medium weight transportation..
Material/colour:	PE/nat, PP/white and grey. POM/blue
Cleanability:	Excellent. FSIS
Accessories:	5 (.20), 25 (.98) and 50 mm (1.97) flights, 25 (.98) and 50 mm (1.97) side guards., friction top.
Application:	Transport of packed goods on a slightly inclined conveyor.
Standard widths:	Increments of 25 mm (.98), e.g. 100 (3.93), 125 mm (4.92) etc Special widths available on request

Food approved

Sprocket Data								
No. of teeth	A= Outside diameter	B= Pitch diameter	C= Inside diameter	Hub width:	Round bore		Square bore	
					mm	in.	mm	in.
6	54 (2.28)	45 (1.77)	36 (1.42)	20 (.79)	20			
8	70 (2.91)	61 (2.40)	52 (2.05)	20 (.79)	20/25	1	25	1
12	104 (4.25)	95 (3.74)	86 (3.39)	20 (.79)	20/25/30/40	1/1¼	25/40	1½
20	169 (6.81)	160 (6.30)	151 (5.94)	35 (1.38)	25/30/40	1/1¼	25/40/60	1½/2½

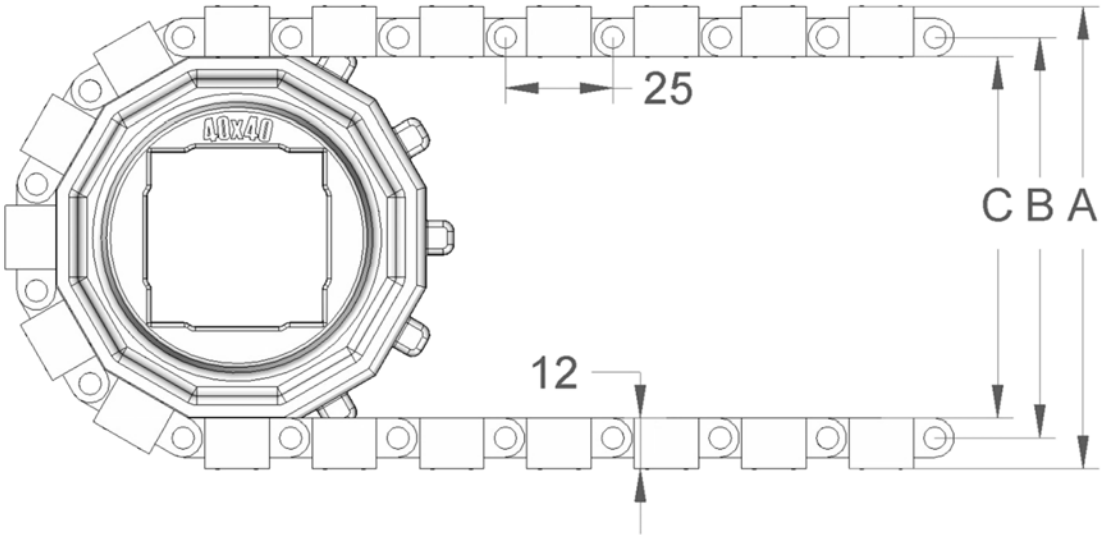

S.25-402

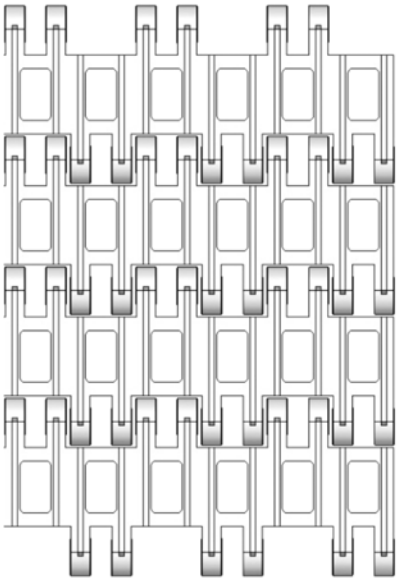

Belt Data		
Materials	Max. belt pull Lb/ft of width	Belt weight lb/square foot
Polyethylene (PE)	470	1.22
Polypropylene (PP)	750	1.22
Polyacetal (POM)	1000	1.54

Belt surface:	Raised ribs, 5 mm.
Open area:	29 %. Biggest opening 6 x 10 mm (.24 x .39)
Strength:	Ideal for medium weight transportation..
Material/colour:	PE/nat, PP/white and grey. POM/blue
Cleanability:	Excellent. FSIS
Accessories:	5 (.20), 25 (.98) and 50 mm (1.97) flights, 25 (.98) and 50 mm (1.97) side guards., friction top.
Application:	Transport of products which demand a low contact surface.
Standard widths:	Increments of 25 mm (.98), e.g. 100 (3.93), 125 mm (4.92) etc Special widths available on request
Food approved	

Sprocket Data								
No. of teeth	A= Outside diameter	B= Pitch diameter	C= Inside diameter	Hub width:	Round bore		Square bore	
					mm	in.	mm	in.
6	54 (2.40)	45 (1.77)	36 (1.42)	20 (.79)	20			
8	70 (3.07)	61 (2.40)	52 (2.05)	20 (.79)	20/25	1	25	1
12	104 (4.41)	95 (3.74)	86 (3.39)	20 (.79)	20/25/30/40	1/1¼	25/40	1½
20	169 (6.97)	160 (6.30)	151 (5.94)	35 (1.38)	25/30/40	1/1¼	25/40/60	1½/2½

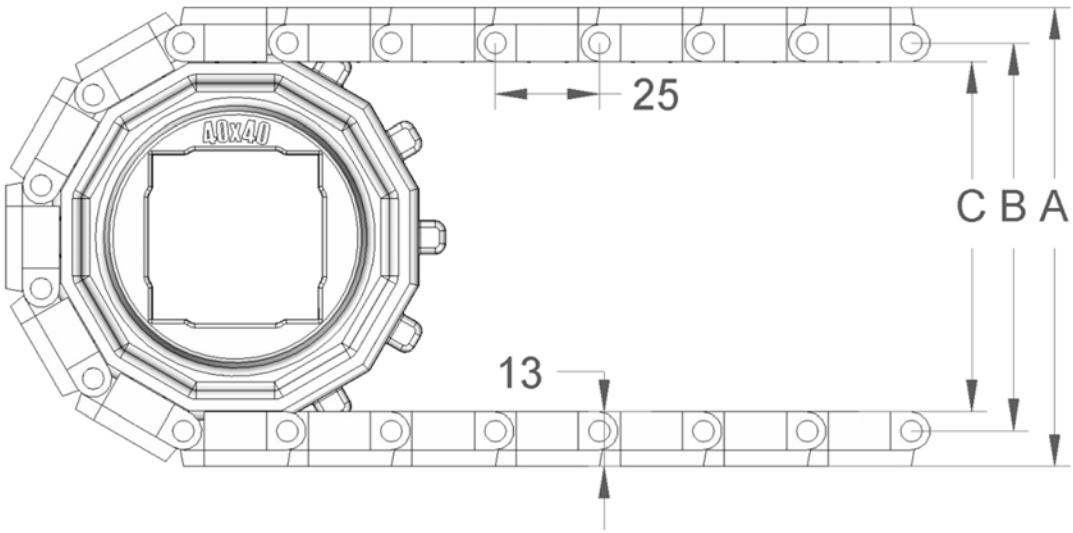

S.25-406

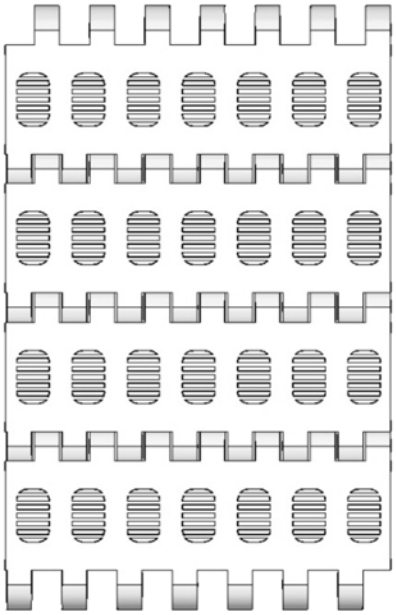

Belt Data		
Materials	Max. belt pull Lb/ft of width	Belt weight lb/square foot
Polyethylene (PE)	600	1.22
Polypropylene (PP)	840	1.22
Polyacetal (POM)	1600	1.64

Belt surface:	Perforated flat top.
Open area:	13 %. Biggest opening 1 x 6 mm (.04 x .24)
Strength:	Ideal for medium weight transportation.
Material/colour:	PE/nat, PP/white and grey. POM/blue
Cleanability:	Good
Accessories:	3 (.12), 25 (.98) and 50 mm (1.97) flights, 25 (.98) and 50 mm (1.97) side guards. 25 (.98) and 50 mm (1.97) friction flights.
Application:	Dairy, vegetables, poultry, snacks, sweet goods and other industries that handle products requiring drainage and very small openings.
Standard widths:	Increments of 10mm (.39), e.g. 100 (3.93), 110 (4.33)
Food approved	

Sprocket Data								
No. of teeth	A= Outside diameter	B= Pitch diameter	C= Inside diameter	Hub width:	Round bore		Square bore	
					mm	in.	mm	in.
6	54 (2.13)	45 (1.77)	36 (1.42)	20 (.79)	20			
8	70 (2.76)	61 (2.40)	52 (2.05)	20 (.79)	20/25	1	25	1
12	104 (4.09)	95 (3.74)	86 (3.39)	20 (.79)	20/25/30/40	1/1¼	25/40	1½
20	169 (6.65)	160 (6.30)	151 (5.94)	35 (1.38)	25/30/40	1/1¼	25/40/60	1½/2½

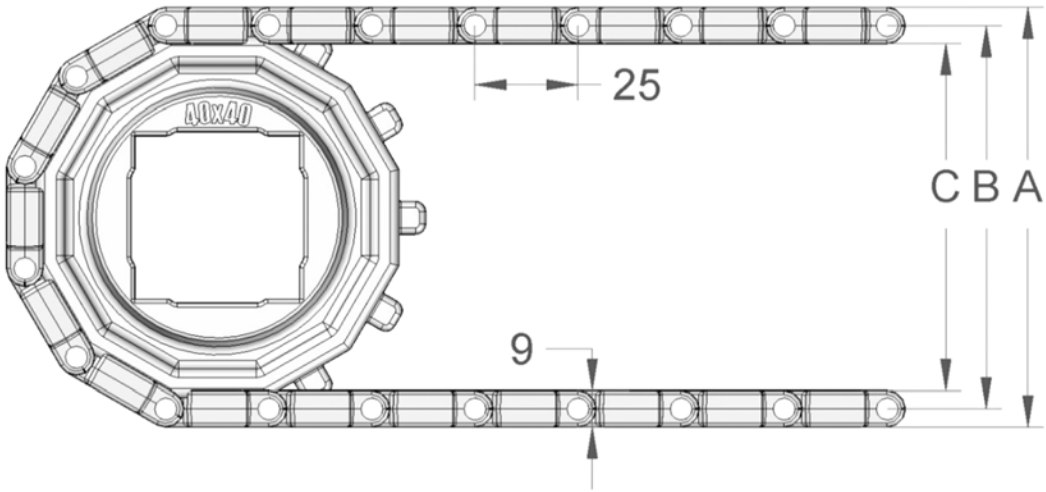

S.25-408

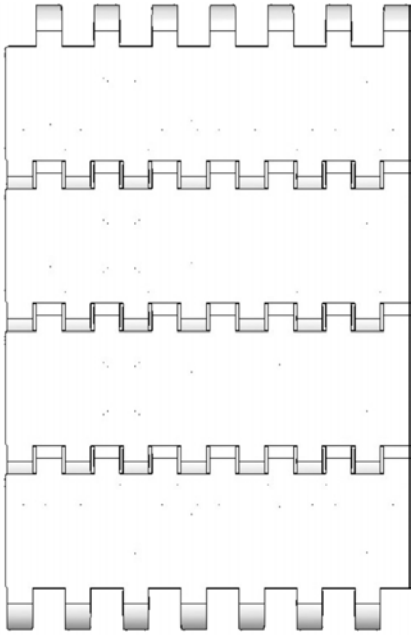

Belt Data		
Materials	Max. belt pull Lb/ft of width	Belt weight lb/square foot
Polyethylene (PE)	600	1.22
Polypropylene (PP)	840	1.22
Polyacetal (POM)	1600	1.74

Belt surface:	Flat top.
Open area:	Closed.
Strength:	Strongest belt in the S.25 series. Ideal for medium weight transportation.
Material/colour:	PE/nat, PP/white and grey. POM/blue
Cleanability:	Good.FSIS
Accessories:	3 (.12), 25 (.98) and 50 mm (1.97) flights, 25 (.98) and 50 mm (1.97) side guards. 25 (.98) and 50 mm (1.97) friction flights.
Application:	Transport of small products such as machine components. Vulcanising belt for the rubber industry.
Standard widths:	Increments of 10mm (.39), e.g. 100 (3.93), 110 (4.33)
Food approved	

Sprocket Data								
No. of teeth	A= Outside diameter	B= Pitch diameter	C= Inside diameter	Hub width:	Round bore		Square bore	
					mm	in.	mm	in.
6	54 (2.13)	45 (1.77)	36 (1.42)	20 (.79)	20			
8	70 (2.76)	61 (2.40)	52 (2.05)	20 (.79)	20/25	1	25	1
12	104 (4.09)	95 (3.74)	86 (3.39)	20 (.79)	20/25/30/40	1/1¼	25/40	1½
20	169 (6.65)	160 (6.30)	151 (5.94)	35 (1.38)	25/30/40	1/1¼	25/40/60	1½/2½

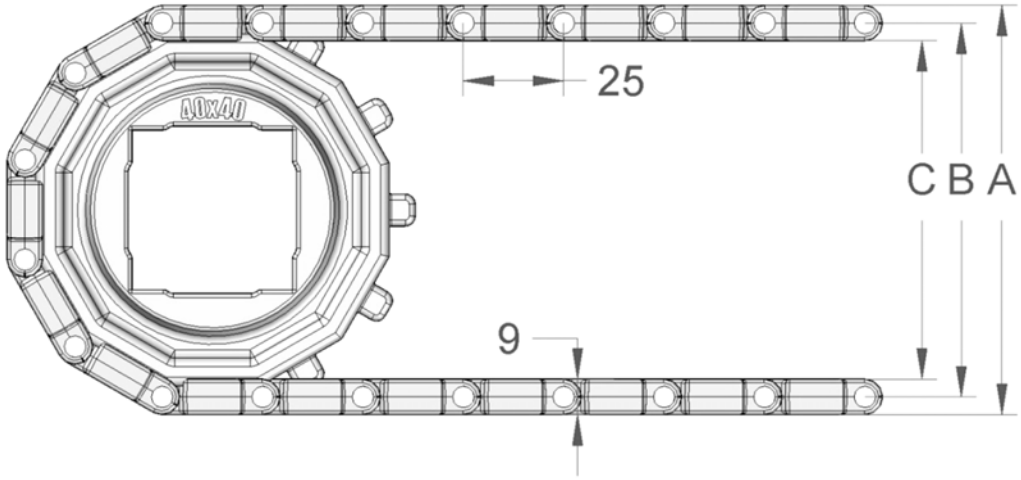

S.25-411

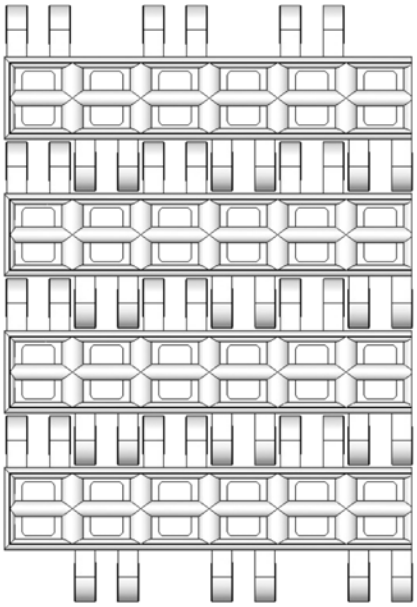

Belt Data		
Materials	Max. belt pull Lb/ft of width	Belt weight lb/square foot
Polyethylene (PE)	425	1.22
Polypropylene (PP)	710	1.22
Polyacetal (POM)	1080	1.54

Belt surface:	Open net-like belt with a curved surface.
Open area:	26 %. Biggest opening 3 x 6 mm (.12 x .24)
Strength:	Ideal for medium weight transportation.
Material/colour:	PE/nat, PP/white and grey. POM/blue
Cleanability:	Excellent. FSIS
Accessories:	3 (.12), 25 (.98) and 50 mm (1.97) flights, 25 (.98) and 50 mm (1.97) side guards. 25 (.98) and 50 mm (1.97) friction flights.
Application:	Fish, meat, vegetables, frozen food etc. Suitable for blanching belts and boiling of noodles.
Standard widths:	Increments of 25mm (.98), e.g. 100 (3.93), 125 (4.92)
Food approved	

Sprocket Data								
No. of teeth	A= Outside diameter	B= Pitch diameter	C= Inside diameter	Hub width:	Round bore		Square bore	
					mm	in.	mm	in.
6	54 (2.13)	45 (1.77)	36 (1.42)	20 (.79)	20			
8	70 (2.76)	61 (2.40)	52 (2.05)	20 (.79)	20/25	1	25	1
12	104 (4.09)	95 (3.74)	86 (3.39)	20 (.79)	20/25/30/40	1/1¼	25/40	1½
20	169 (6.65)	160 (6.30)	151 (5.94)	35 (1.38)	25/30/40	1/1¼	25/40/60	1½/2½

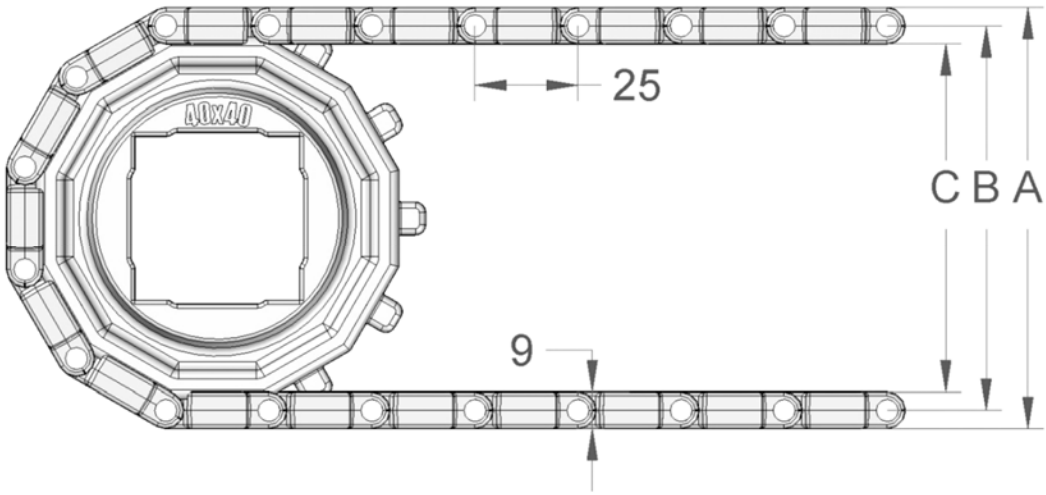

S.25-412

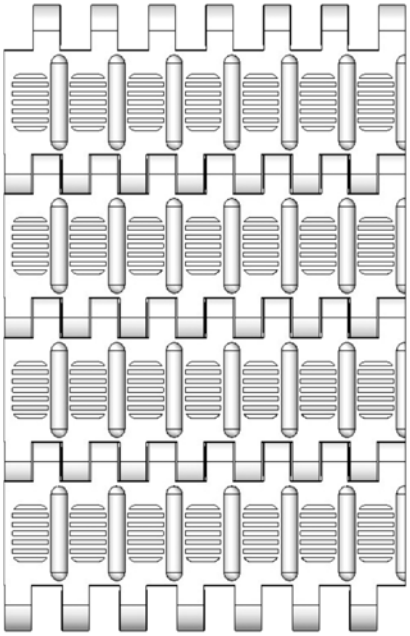

Belt Data		
Materials	Max. belt pull Lb/ft of width	Belt weight lb/square foot
Polyethylene (PE)	600	1.22
Polypropylene (PP)	840	1.22
Polyacetal (POM)	1600	1.84

Belt surface:	Open net-like belt with 2,5 mm (.10) flights.
Open area:	13 %. Biggest opening 1 x 6 mm (.04 x .24)
Strength:	Ideal for medium weight transportation.
Material/colour:	PE/nat, PP/white and grey. POM/blue
Cleanability:	Good. FSIS
Accessories:	3 (.12), 25 (.98) and 50 mm (1.97) flights, 25 (.98) and 50 mm (1.97) side guards.
Application:	Fish, meat, vegetables etc. Suitable for blanching belts and boiling of noodles.
Standard widths:	Increments of 10mm (.39), e.g. 100 (3.93), 110 (4.33)
Food approved	

Sprocket Data								
No. of teeth	A= Outside diameter	B= Pitch diameter	C= Inside diameter	Hub width:	Round bore		Square bore	
					mm	in.	mm	in.
6	57 (2.28)	45 (1.77)	36 (1.42)	20 (.79)	20			
8	75 (2.91)	61 (2.40)	52 (2.05)	20 (.79)	20/25	1	25	1
12	108 (4.25)	95 (3.74)	86 (3.39)	20 (.79)	20/25/30/40	1/1¼	25/40	1½
20	173 (6.81)	160 (6.30)	151 (5.94)	35 (1.38)	25/30/40	1/1¼	25/40/60	1½/2½

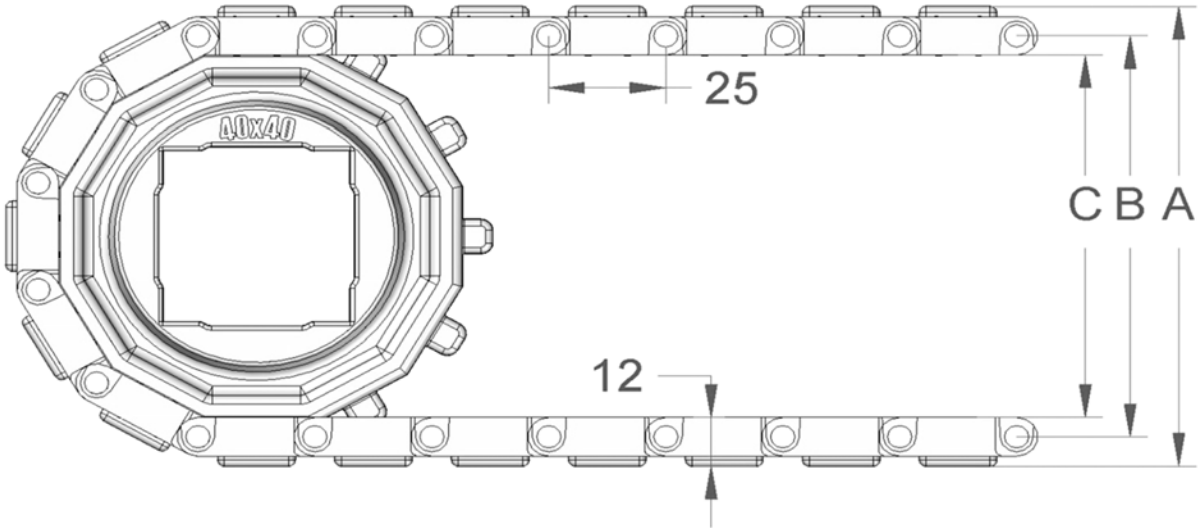

S.25-418

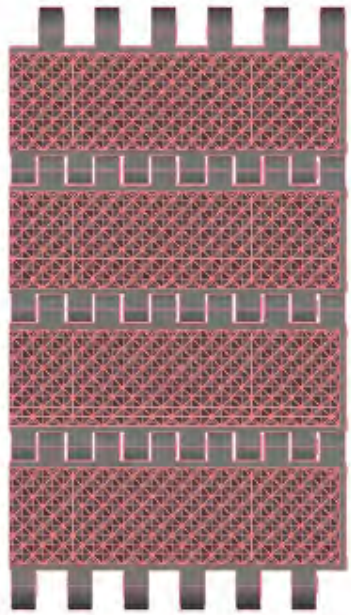

Belt Data		
Materials	Max. belt pull Lb/ft of width	Belt weight lb/square foot
Polyethylene (PE)	600	1.22
Polypropylene (PP)	840	1.22
Polyacetal (POM)	1600	1.74

Belt surface:	Rough top
Open area:	Closed.
Strength:	Strongest belt in the S.25 series. Ideal for medium weight transportation.
Material/colour:	PE/nat, PP/white and grey. POM/blue
Cleanability:	Good.FSIS
Accessories:	3 (.12), 25 (.98) and 50 mm (1.97) flights, 25 (.98) and 50 mm (1.97) side guards.
Application:	Pallets, doors, panels. The rough top ensures a higher friction as well as extra wear surface.
Standard widths:	Increments of 10mm (.39), e.g. 100 (3.93), 110 (4.33)
Food approved	

Sprocket Data								
No. of teeth	A= Outside diameter	B= Pitch diameter	C= Inside diameter	Hub width:	Round bore		Square bore	
					mm	in.	mm	in.
6	54 (2.13)	45 (1.77)	36 (1.42)	20 (.79)	20			
8	70 (2.76)	61 (2.40)	52 (2.05)	20 (.79)	20/25	1	25	1
12	104 (4.09)	95 (3.74)	86 (3.39)	20 (.79)	20/25/30/40	1/1¼	25/40	1½
20	169 (6.65)	160 (6.30)	151 (5.94)	35 (1.38)	25/30/40	1/1¼	25/40/60	1½/2½

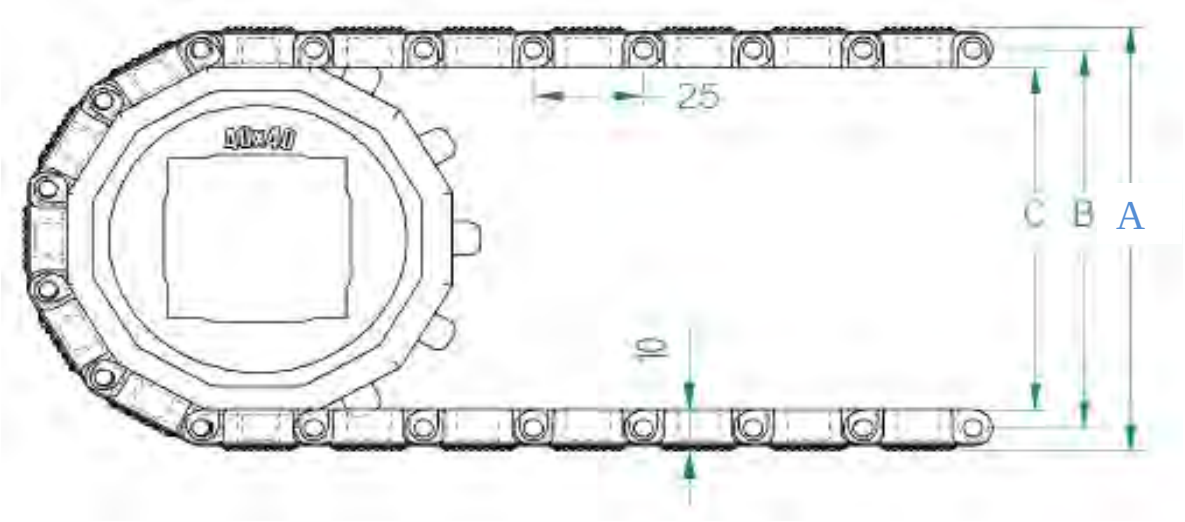

S.25-420

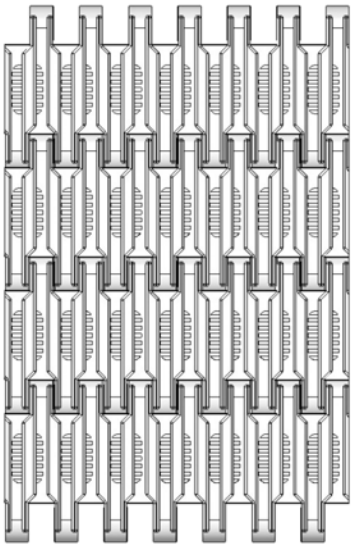

Belt Data		
Materials	Max. belt pull Lb/ft of width	Belt weight lb/square foot
Polyethylene (PE)	600	1.64
Polypropylene (PP)	840	1.64
Polyacetal (POM)	1600	2.25

Belt surface:	Raised ribs – drained – for the use of finger transfer plates.
Open area:	14 %. Biggest opening 10 x 2 mm (.39 x .08)
Strength:	Ideal for medium weight transportation.
Material/colour:	PE/nat, PP/white and grey. POM/blue.
Cleanability:	Excellent. FSIS
Accessories:	Finger transfer plates.
Application:	Transport of small products, such as bottles, glass and machine components.
Standard widths:	Increments of 10mm (.39), e.g. 100 (3.93), 110 (4.33)
Food approved	

Sprocket Data								
No. of teeth	A= Outside diameter	B= Pitch diameter	C= Inside diameter	Hub width:	Round bore		Square bore	
					mm	in.	mm	in.
6	64 (2.52)	45 (1.77)	36 (1.42)	20 (.79)	20			
8	80 (3.15)	61 (2.40)	52 (2.05)	20 (.79)	20/25	1	25	1
12	114 (4.49)	95 (3.74)	86 (3.39)	20 (.79)	20/25/30/40	1/1¼	25/40	1½
20	179 (7.05)	160 (6.30)	151 (5.94)	35 (1.38)	25/30/40	1/1¼	25/40/60	1½/2½

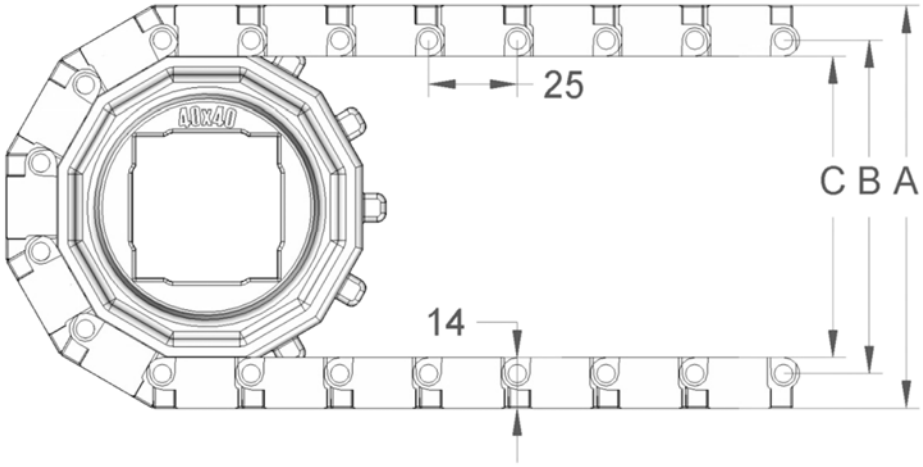

S.25-600

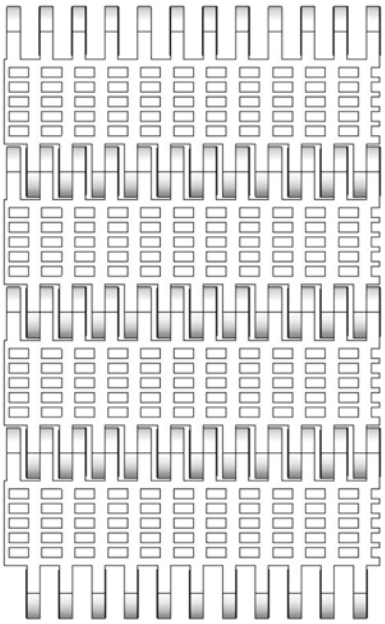

Belt Data		
Materials	Max. belt pull Lb/ft of width	Belt weight lb/square foot
Polyethylene (PE)	360	.82
Polypropylene (PP)	500	.82
Polyacetal (POM)	840	1.22

Belt surface:	Perforated flat top.
Open area:	16 %. Biggest opening 1,5 x 3 mm (.06 x .12)
Strength:	An ideal choice for light transportation.
Material/colour:	PE/nat, PP/white and grey. POM/blue.
Cleanability:	Good. FSIS
Accessories:	5 (.20), 25 (.98) and 50 mm (1.97) flights, 25 (.98) and 50 mm (1.97) side guards. 25 (.98) and 50 mm (1.97) friction flights.
Application:	Bakery (raw dough), poultry, sweets and other industries.
Standard widths:	Increments of 6 mm (.24), e.g. 100 (3.93), 106 mm (4.17)
Food approved	

Sprocket Data								
No. of teeth	A= Outside diameter	B= Pitch diameter	C= Inside diameter	Hub width:	Round bore		Square bore	
					mm	in.	mm	in.
6	59 (2.32)	50 (1.97)	41 (1.61)	40 (1.57)	20			
12	106 (4.17)	97 (3.82)	88 (3.46)	40 (1.57)	20/25/30/40	1	40	1½
20	172 (6.69)	161 (6.34)	152 (5.98)	40 (1.57)	25/30/40	1	40/60	1½/2½

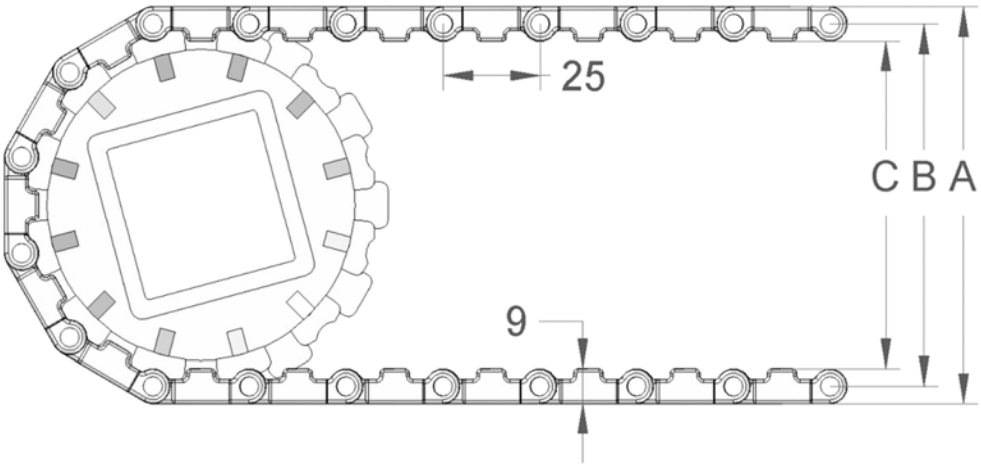

S.25-700

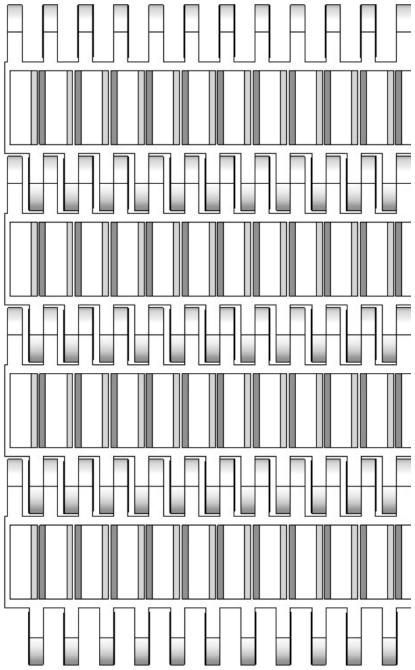

Belt Data		
Materials	Max. belt pull Lb/ft of width	Belt weight lb/square foot
Polyethylene (PE)	360	.82
Polypropylene (PP)	500	.82
Polyacetal (POM)	840	1.22

Belt surface:	Open belt with a smooth surface..
Open area:	27 %. Biggest opening 3 x 12 mm (.12 x .47)
Strength:	An ideal choice for light transportation.
Material/colour:	PE/nat, PP/white and grey. POM/blue
Cleanability:	Good. FSIS
Accessories:	5 (.20), 25 (.98) and 50 mm (1.97) flights, 25 (.98) and 50 mm (1.97) side guards.
Application:	Vegetables, bakery, seafood, poultry and other industries. Even as cooling/freezing belt.
Standard widths:	Increments of 6 mm (.24), e.g. 100 (3.93), 106 mm (4.17)
Food approved	

Sprocket Data								
No. of teeth	A= Outside diameter	B= Pitch diameter	C= Inside diameter	Hub width:	Round bore		Square bore	
					mm	in.	mm	in.
6	59 (2.32)	50 (1.97)	41 (1.61)	40 (1.57)	20			
12	106 (4.17)	97 (3.82)	88 (3.46)	40 (1.57)	20/25/30/40	1	40	1½
20	172 (6.69)	161 (6.34)	152 (5.98)	40 (1.57)	25/30/40	1	40/60	1½/2½

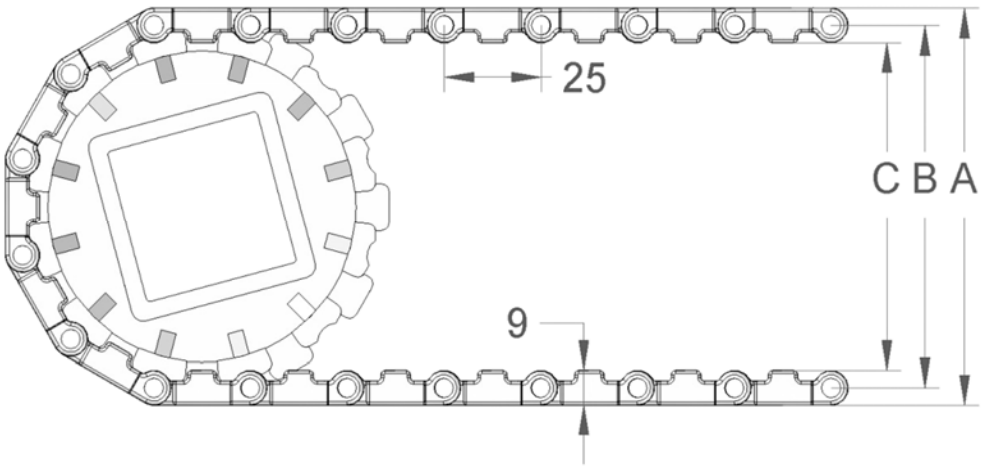

S.25-702

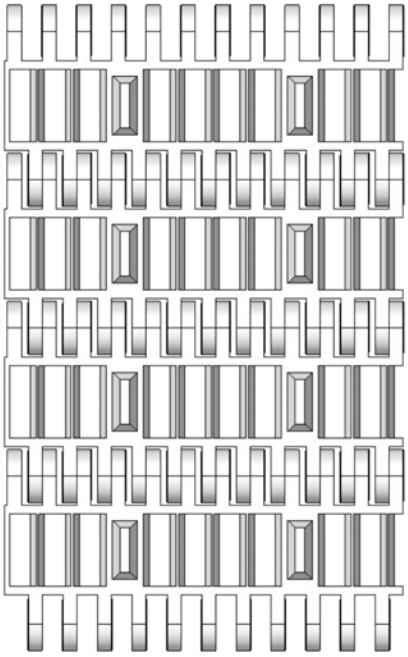

Belt Data		
Materials	Max. belt pull Lb/ft of width	Belt weight lb/square foot
Polyethylene (PE)	360	.82
Polypropylene (PP)	500	.82
Polyacetal (POM)	840	1.22

Belt surface:	Open net-like belt with 2,5 mm (.10) flights.
Open area:	22 %. Biggest opening 3 x 12 mm (.12 x .47)
Strength:	An ideal choice for light transportation.
Material/colour:	PE/nat, PP/white and grey. POM/blue.
Cleanability:	Good. FSIS
Accessories:	5 (.20), 25 (.98) and 50 mm (1.97) flights, 25 (.98) and 50 mm (1.97) side guards. Standard modules can be supplied in a special high-friction material.
Application:	Products requiring drainage and demanding a low contact surface, such as lacquering of furniture.
Standard widths:	Increments of 6 mm (.24), e.g. 100 (3.93), 106 mm (4.17)
Food approved	

Sprocket Data								
No. of teeth	A= Outside diameter	B= Pitch diameter	C= Inside diameter	Hub width:	Round bore		Square bore	
					mm	in.	mm	in.
6	59 (2.32)	50 (1.97)	41 (1.61)	40 (1.57)	20			
12	106 (4.17)	97 (3.82)	88 (3.46)	40 (1.57)	20/25/30/40	1	40	1½
20	172 (6.69)	161 (6.34)	152 (5.98)	40 (1.57)	25/30/40	1	40/60	1½/2½

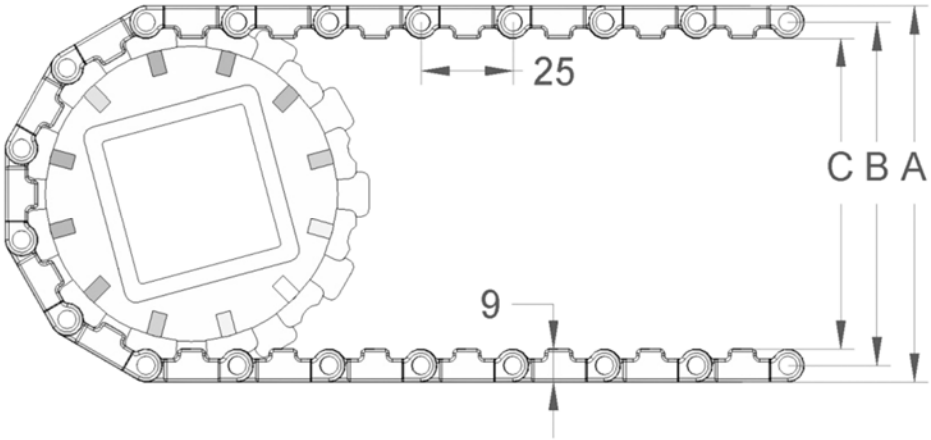

S.25-800

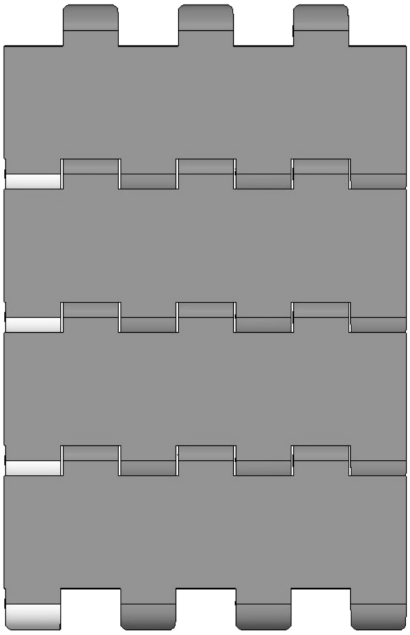

Belt Data		
Materials	Max. belt pull Lb/ft of width	Belt weight lb/square foot
Polyethylene (PE)	370	1.0
Polypropylene (PP)	435	1.0
Polyacetal (POM)	700	1.54

Belt surface:	Flat top.
Open area:	Closed.
Strength:	An ideal choice for light transportation.
Material/colour:	PE/nat, PP/white and grey. POM/blue.
Cleanability:	Excellent. FSIS.
Accessories:	3 (.12), 25 (.98) and 50 mm (1.97) flights. 25 (.98) and 50 mm (1.97) side guards, friction top.
Application:	Red meat, vegetables, seafood, fruit, snacks and pastry.
Standard widths:	Increments of 20 mm (.98), e.g. 100 (3.93), 120 mm (4.72) etc Special widths available on request
Food approved	

Sprocket Data								
No. of teeth	A= Outside diameter	B= Pitch diameter	C= Inside diameter	Hub width:	Round bore		Square bore	
					mm	in.	mm	in.
6	59 (2.32)	50 (1.97)	41 (1.61)	20 (.79)	20	¾/1		
12	106 (4.17)	97 (3.82)	88 (3.46)	20 (.79)	20/25/30/40	¾/1/1¼	40	1½
20	170 (6.69)	161 (6.34)	152 (5.98)	35 (1.38)	25/30/40	¾/1/1¼	40/60	1½/2½

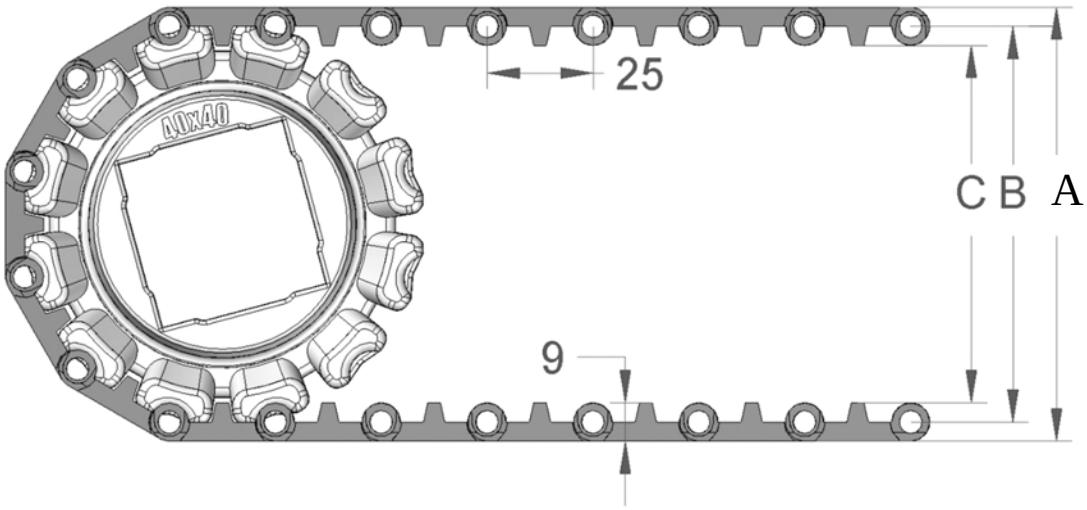

S.25-800F (friction)

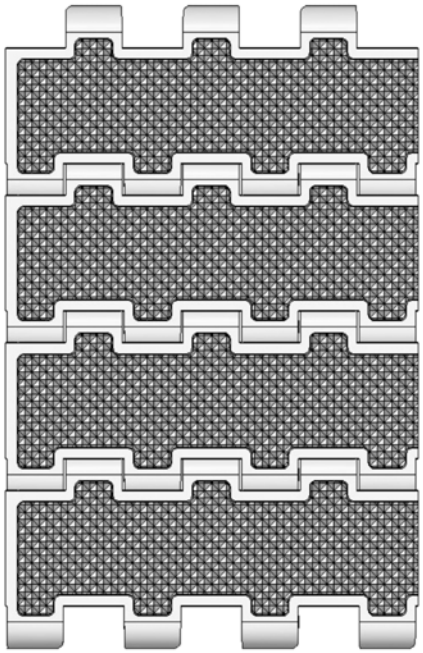

Belt Data		
Materials	Max. belt pull Lb/ft of width	Belt weight lb/square foot
Copolymer	400	1.43

Belt surface:	Closed belt with a 3mm (.12) friction surface
Open area:	Closed.
Strength:	An ideal choice for light transportation.
Colour:	Nat/white.
Cleanability:	Good.
Accessories:	25 (.98) and 50 mm (1.97) flights. 25 (.98) and 50 mm (1.97) side guards.
Application:	Transport of goods on a slightly inclined conveyor.
Standard widths:	Increments of 20 mm (.98), e.g. 100 (3.93), 120 mm (4.72) etc Special widths available on request
Food approved	

Sprocket Data								
No. of teeth	A= Outside diameter	B= Pitch diameter	C= Inside diameter	Hub width:	Round bore		Square bore	
					mm	in.	mm	in.
6	65 (2.52)	50 (1.97)	41 (1.61)	20 (.79)	20	¾/1		
12	112 (4.37)	97 (3.82)	88 (3.46)	20 (.79)	20/25/30/40	¾/1/1¼	40	1½
20	176 (6.89)	161 (6.34)	152 (5.98)	35 (1.38)	25/30/40	¾/1/1¼	40/60	1½/2½

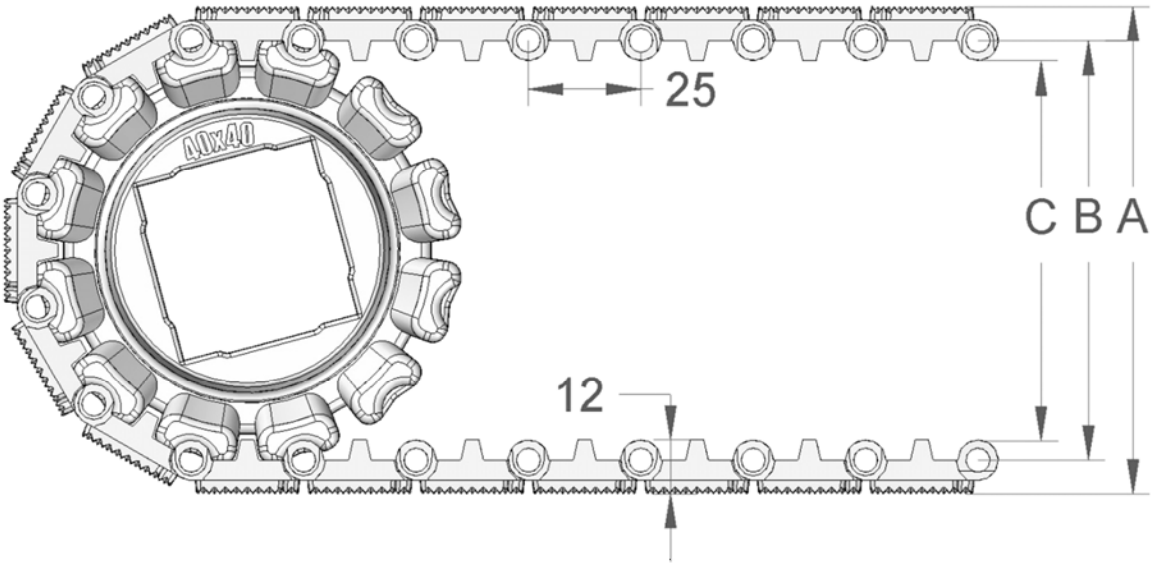

S.25-801

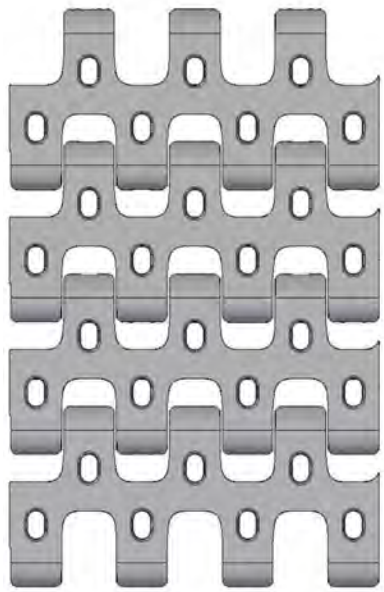

Belt Data		
Materials	Max. belt pull Lb/ft of width	Belt weight lb/square foot
Polyethylene (PE)	370	1.13
Polypropylene (PP)	435	1.13
Polyacetal (POM)	700	1.64

Belt surface:	Open belt with smooth surface.
Open area:	41 %. Biggest opening 10 x 5 mm (.39 x .20)
Strength:	An ideal choice for light transportation.
Material/colour:	PE/nat, PP/white and grey. POM/blue.
Cleanability:	Excellent. FSIS.
Accessories:	3 (.12), 25 (.98) and 50 mm (1.97) flights. 25 (.98) and 50 mm (1.97) side guards, friction top.
Application:	Red meat, vegetables, seafood, fruit, snacks and pastry
Standard widths:	Increments of 20 mm (.98), e.g. 100 (3.93), 120mm (4.72) etc Special widths available on request

Food approved

Sprocket Data								
No. of teeth	A= Outside diameter	B= Pitch diameter	C= Inside diameter	Hub width:	Round bore		Square bore	
					mm	in.	mm	in.
6	59 (2.32)	50 (1.97)	41 (1.61)	20 (.79)	20	¾/1		
12	106 (4.17)	97 (3.82)	88 (3.46)	20 (.79)	20/25/30/40	¾/1/1¼	40	1½
20	170 (6.69)	161 (6.34)	152 (5.98)	35 (1.38)	25/30/40	¾/1/1¼	40/60	1½/2½

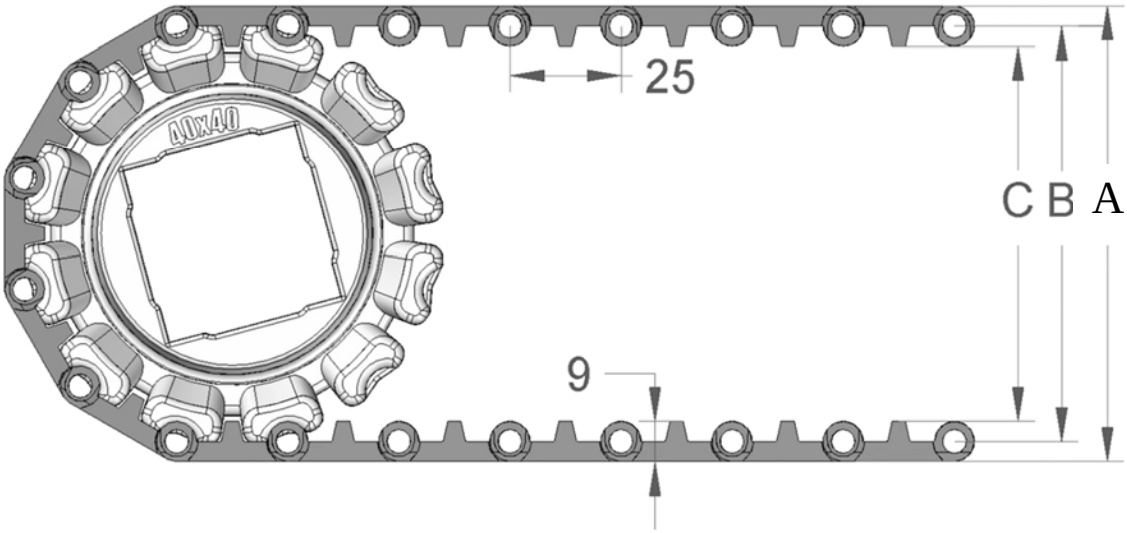

S.25-806

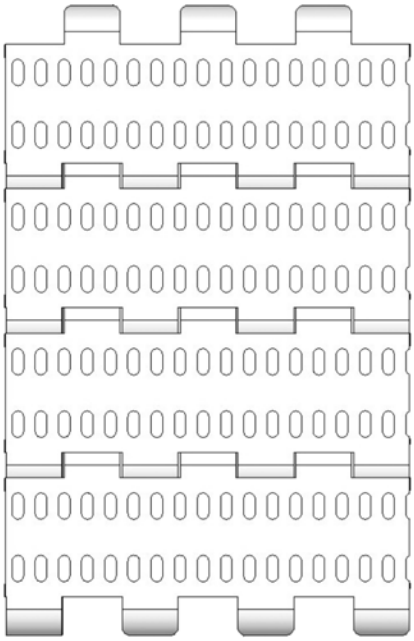

Belt Data		
Materials	Max. belt pull Lb/ft of width	Belt weight lb/square foot
Polyethylene (PE)	370	1.13
Polypropylene (PP)	435	1.13
Polyacetal (POM)	700	1.64

Belt surface:	Perforated flat top.
Open area:	17 %. Biggest opening 2 x 5 mm (.08 x .20)
Strength:	An ideal choice for light transportation.
Material/colour:	PE/nat, PP/white and grey. POM/blue.
Cleanability:	Excellent. FSIS.
Accessories:	3 (.12), 25 (.98) and 50 mm (1.97) flights. 25 (.98) and 50 mm (1.97) side guards, friction top.
Application:	Seafood, dairy, vegetables, poultry, snacks, sweet goods and other industries that handle products requiring drainage and small openings.
Standard widths:	Increments of 20 mm (.98), e.g. 100 (3.93), 120 mm (4.72) etc Special widths available on request

Food approved

Sprocket Data								
No. of teeth	A= Outside diameter	B= Pitch diameter	C= Inside diameter	Hub width:	Round bore		Square bore	
					mm	in.	mm	in.
6	59 (2.32)	50 (1.97)	41 (1.61)	20 (.79)	20	¾/1		
12	106 (4.17)	97 (3.82)	88 (3.46)	20 (.79)	20/25/30/40	¾/1/1¼	40	1½
20	170 (6.69)	161 (6.34)	152 (5.98)	35 (1.38)	25/30/40	¾/1/1¼	40/60	1½/2½

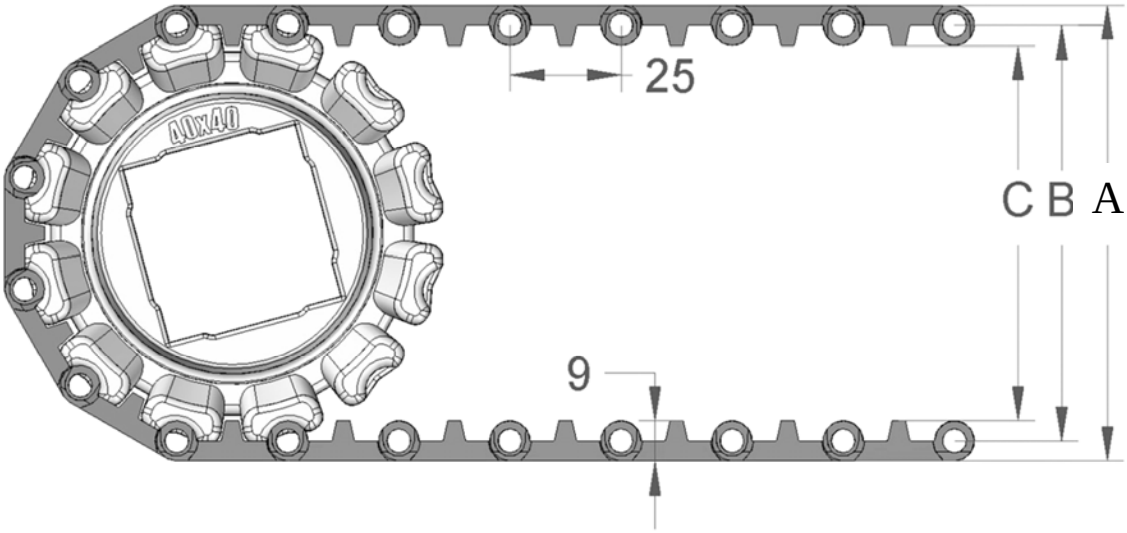

S.25-830

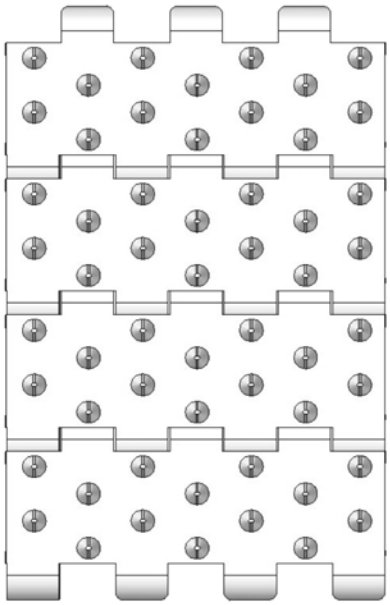

Belt Data		
Materials	Max. belt pull Lb/ft of width	Belt weight lb/square foot
Polyethylene (PE)	370	1.13
Polypropylene (PP)	435	1.13
Polyacetal (POM)	700	1.64

Belt surface: Structure top with 3 mm (.12) cones.
Open area: Closed.
Strength: An ideal choice for light transportation.
Material/colour: PE/nat, PP/white and grey. POM/blue.
Cleanability: Excellent. FSIS.
Accessories: 25 (.98) and 50 mm (1.97) flights. 25 (.98) and 50 mm (1.97) side guards, can be supplied with a moulded indent of 40 mm (1.57")
Application: Seafood, red meat, vegetables etc.
Standard widths: Increments of 20 mm (.98), e.g. 100 (3.93), 120 mm (4.72) etc Special widths available on request

Food approved

Sprocket Data								
No. of teeth	A= Outside diameter	B= Pitch diameter	C= Inside diameter	Hub width:	Round bore		Square bore	
					mm	in.	mm	in.
6	65 (2.52)	50 (1.97)	41 (1.61)	20 (.79)	20	¾/1		
12	112 (4.37)	97 (3.82)	88 (3.46)	20 (.79)	20/25/30/40	¾/1/1¼	40	1½
20	176 (6.89)	161 (6.34)	152 (5.98)	35 (1.38)	25/30/40	¾/1/1¼	40/60	1½/2½

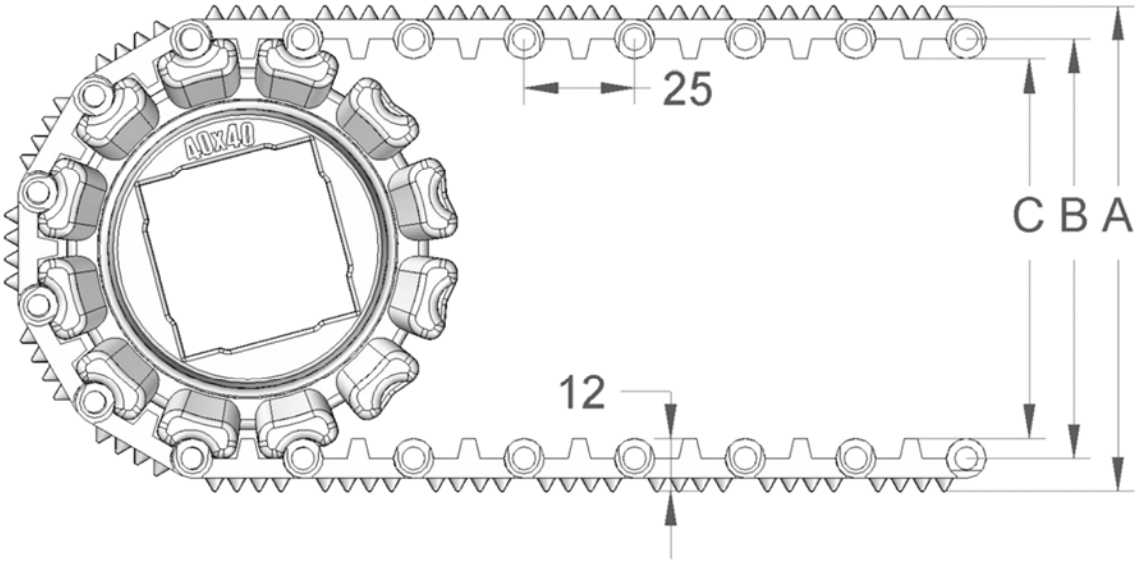

S.25-836

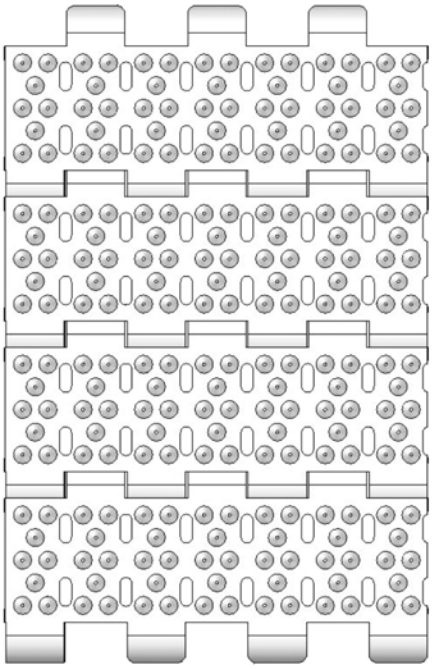

Belt Data		
Materials	Max. belt pull Lb/ft of width	Belt weight lb/square foot
Polyethylene (PE)	370	1.13
Polypropylene (PP)	435	1.13
Polyacetal (POM)	700	1.64

Belt surface:	Structure top with 3 mm (.12) cones.
Open area:	7 %. Biggest opening 2 x 5 mm (.08 x .20)
Strength:	An ideal choice for light transportation.
Material/colour:	PE/nat, PP/white and grey. POM/blue.
Cleanability:	Excellent. FSIS.
Accessories:	25 (.98) and 50 mm (1.97) flights. 25 (.98) and 50 mm (1.97) side guards, can be supplied with a moulded indent of 40 mm (1.57”).
Application:	Seafood, red meat, vegetables etc.
Standard widths:	Increments of 20 mm (.98), e.g. 100 (3.93), 120 mm (4.72) etc Special widths available on request
Food approved	

Sprocket Data								
No. of teeth	A= Outside diameter	B= Pitch diameter	C= Inside diameter	Hub width:	Round bore		Square bore	
					mm	in.	mm	in.
6	65 (2.52)	50 (1.97)	41 (1.61)	20 (.79)	20	¾/1		
12	112 (4.37)	97 (3.82)	88 (3.46)	20 (.79)	20/25/30/40	¾/1/1¼	40	1½
20	176 (6.89)	161 (6.34)	152 (5.98)	35 (1.38)	25/30/40	¾/1/1¼	40/60	1½/2½

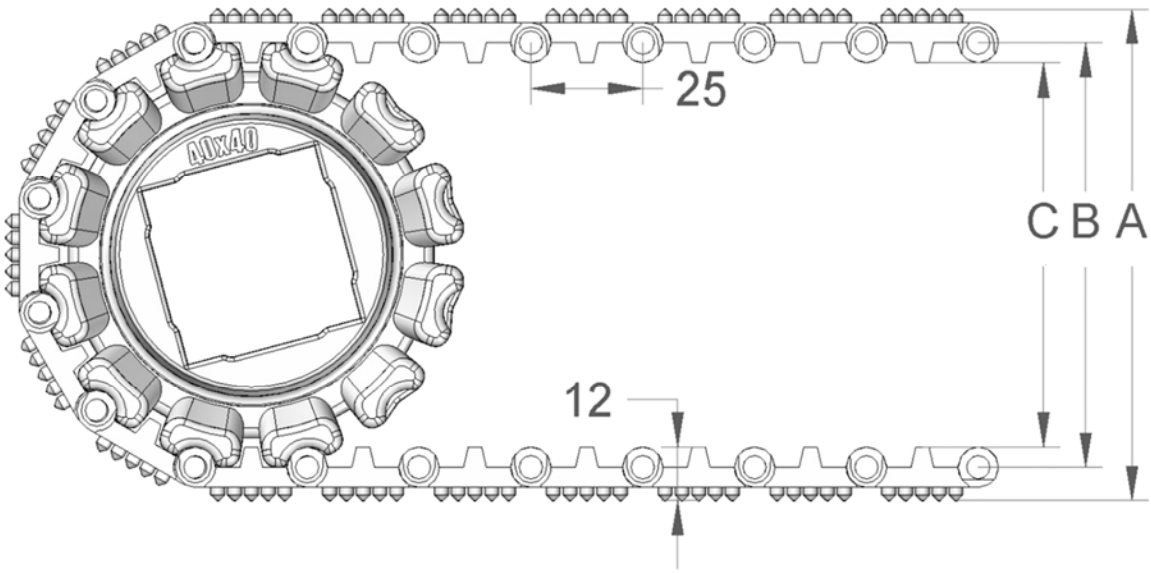

SPARKS BELTING COMPANY

4. Belt S.50

Pitch 50 mm (1.97”)

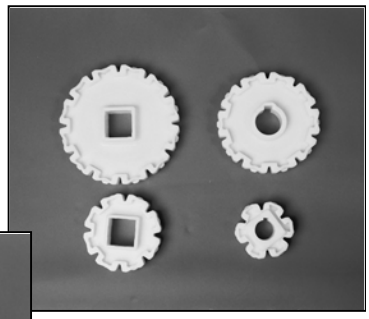

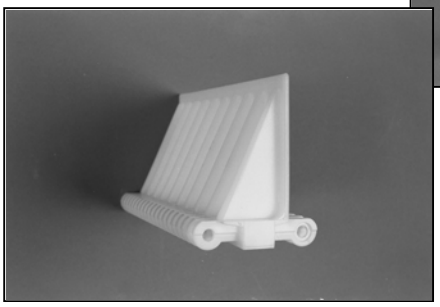

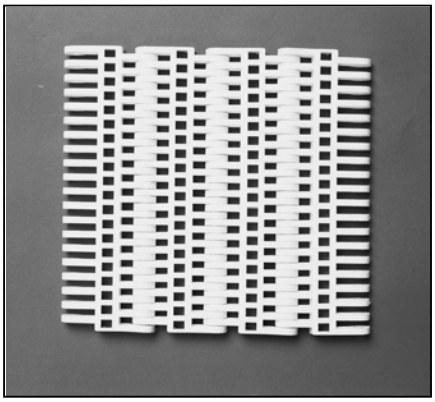

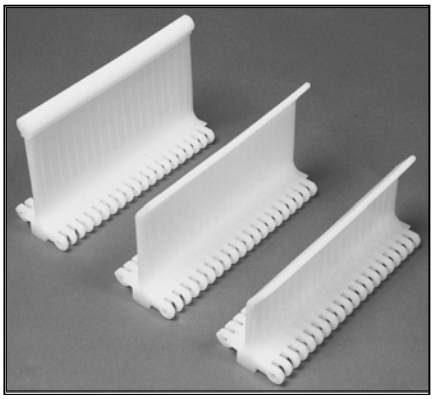

S.50-100

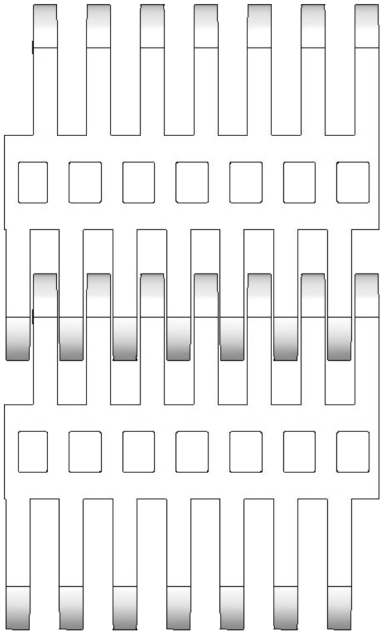

Belt Data		
Materials	Max. belt pull Lb/ft of width	Belt weight lb/square foot
Polyethylene (PE)	1235	1.64
Polypropylene (PP)	1880	1.64
Polyacetal (POM)	2820	2.46

Belt surface:	Open belt with a smooth surface.
Open area:	27 %. Biggest opening 5 x 9 mm (.20 x .35)
Strength:	The right belt for heavy applications.
Material/colour:	PE/nat, PP/white and grey. POM/blue.
Cleanability:	Good. FSIS
Accessories:	25(.98), 50(1.97), 75(2.95) and 100 mm(3.94) flights. Extended and bent flights. 75(2.95) and 150 mm(5.91) supported flights. 50(1.97), 75(2.95), 100(3.94) and 150 mm(5.91) side guards. 50 mm(1.97) comb flights, friction top. Hold-down. Flights fitted with a round top.
Application:	Seafood, wood, bakery, meat, vegetables, poultry and heavy duty transportation in general.
Standard widths:	Increments of 10 mm(.39), e.g. 100(3.94), 110 mm(4.33) etc
Food approved	

Sprocket Data								
No. of teeth	A= Outside diameter	B= Pitch-diameter	C= Inside-diameter	Hub width:	Round bore		Square bore	
					mm	in.	mm	in.
6	105 (4.13)	89 (3.50)	73 (2.87)	20 (.79)	20/25/30/40	¾/1/1¼	25 /40	1½
8	138 (5.43)	122 (4.80)	106 (4.17)	35 (1.38)	25/30/40	1/1¼	25/40	1½
10	172 (6.77)	156 (6.14)	140 (5.51)	35 (1.38)	25/30/40	1/1¼	25/40/60	1½/2½
12	205 (8.07)	189 (7.44)	173 (6.81)	35 (1.38)	25/30/40/50/60	1/1¼	25/40/60	1½/2½
16	270 (10.63)	254 (10.00)	238 (9.37)	40 (1.57)	60/80		40/50/60/55/80	

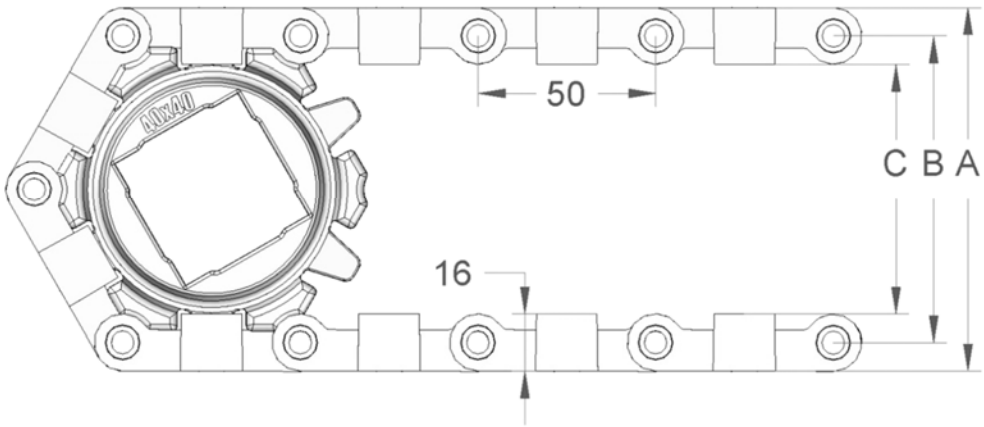

S.50-300

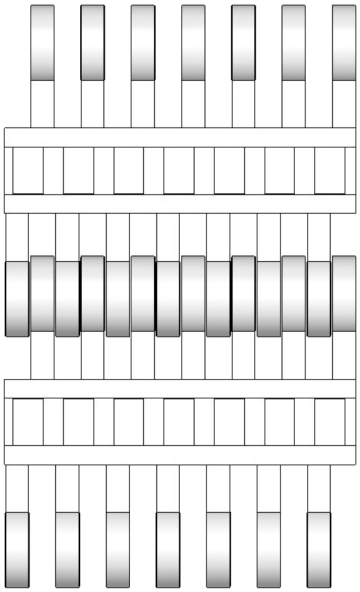

Belt Data		
Materials	Max. belt pull Lb/ft of width	Belt weight lb/square foot
Polyethylene (PE)	1170	1.43
Polypropylene (PP)	1545	1.43
Polyacetal (POM)	2300	2.05

Belt surface:	Open belt with 4 mm (.16) ribs across
Open area:	27 %. Biggest opening 5 x 9 mm (.20 x .35)
Strength:	The right belt for heavy applications.
Material/colour:	PE/nat, PP/white and grey. POM/blue.
Cleanability:	Good. FSIS
Accessories:	25(.98), 50(1.97), 75(2.95) and 100 mm(3.94) flights. Extended and bent flights. 75(2.95) and 150 mm(5.91) supported flights. 50(1.97), 75(2.95), 100(3.94) and 150 mm(5.91) side guards. 50 mm(1.97) comb flights, friction top. Hold-down. Flights fitted with a round top.
Application:	Seafood, wood, bakery, meat, vegetables, poultry and heavy duty transportation in general.
Standard widths:	Increments of 10 mm(.39), e.g. 100(3.94), 110 mm(4.33)
Food approved	

Sprocket Data								
No. of teeth	A= Outside diameter	B= Pitch-diameter	C= Inside-diameter	Hub width:	Round bore		Square bore	
					mm	in.	mm	in.
6	105 (4.13)	89 (3.50)	73 (2.87)	20 (.79)	20/25/30/40	¾/1/1¼	25 /40	1½
8	138 (5.43)	122 (4.80)	106 (4.17)	35 (1.38)	25/30/40	1/1¼	25/40	1½
10	172 (6.77)	156 (6.14)	140 (5.51)	35 (1.38)	25/30/40	1/1¼	25/40/60	1½/2½
12	205 (8.07)	189 (7.44)	173 (6.81)	35 (1.38)	25/30/40/50/60	1/1¼	25/40/60	1½/2½
16	270 (10.63)	254 (10.00)	238 (9.37)	40 (1.57)	60/80		40/50/60/55/80	

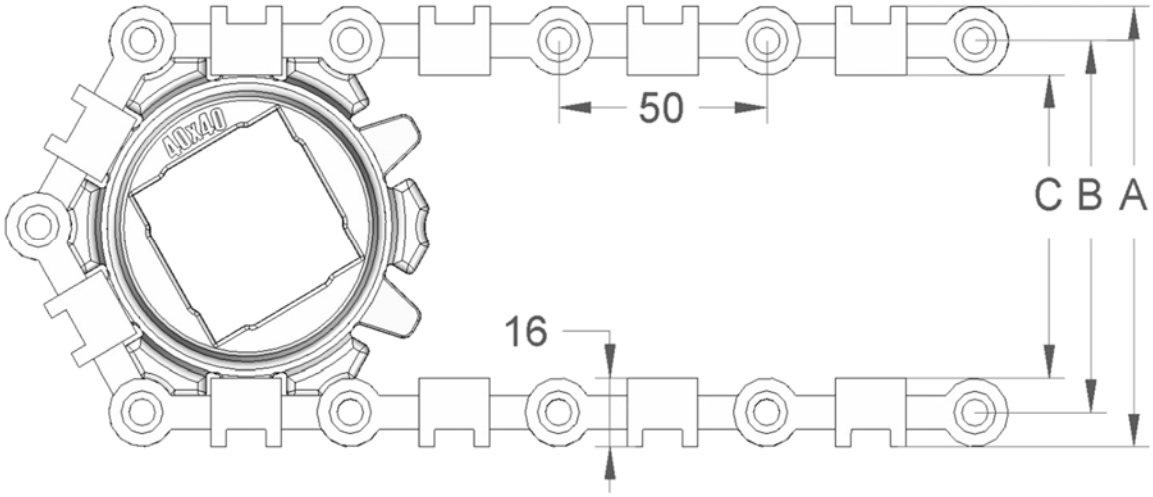

S.50-401

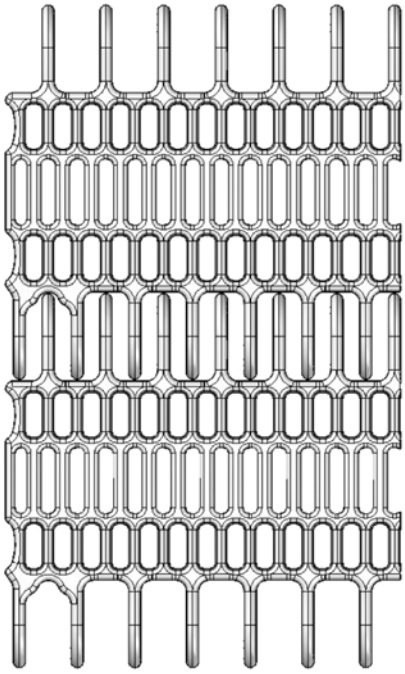

Belt Data		
Materials	Max. belt pull Lb/ft of width	Belt weight lb/square foot
Polyethylene (PE)	800	1.23
Polypropylene (PP)	1050	1.23
Polyacetal (POM)	1575	1.64

Belt surface:	Open belt with a smooth surface.
Open area:	61 %. Biggest opening 3,5 x 11 mm (.14 x .43)
Strength:	The right belt for medium-heavy transportation.
Material/colour:	PE/nat, PP/white and grey. POM/blue.
Cleanability:	Excellent. FSIS.
Accessories:	25(.98), 50(1.97), 75(2.95) flights. Extended and bent flights. 50(1.97), 75(2.95), 100(3.94) and 150 mm(5.91) side guards. Hold-down. Flights fitted with a round top.
Application:	Cooling/freezing belts in the seafood, bakery, vegetables, meat industries and other industries, where large air-flow combined with a small open area is required.
Standard widths:	Increments of 10 mm(.39), e.g. 100(3.94), 110 mm(4.33)
Food approved	

Sprocket Data								
No. of teeth	A= Outside diameter	B= Pitch-diameter	C= Inside-diameter	Hub width:	Round bore		Square bore	
					mm	in.	mm	in.
6	105 (4.13)	89 (3.50)	73 (2.87)	20 (.79)	20/25/30/40	¾/1/1¼	25 /40	1½
8	138 (5.43)	122 (4.80)	106 (4.17)	35 (1.38)	25/30/40	1/1¼	25/40	1½
10	172 (6.77)	156 (6.14)	140 (5.51)	35 (1.38)	25/30/40	1/1¼	25/40/60	1½/2½
12	205 (8.07)	189 (7.44)	173 (6.81)	35 (1.38)	25/30/40/50/60	1/1¼	25/40/60	1½/2½
16	270 (10.63)	254 (10.00)	238 (9.37)	40 (1.57)	60/80		40/50/60/55/80	

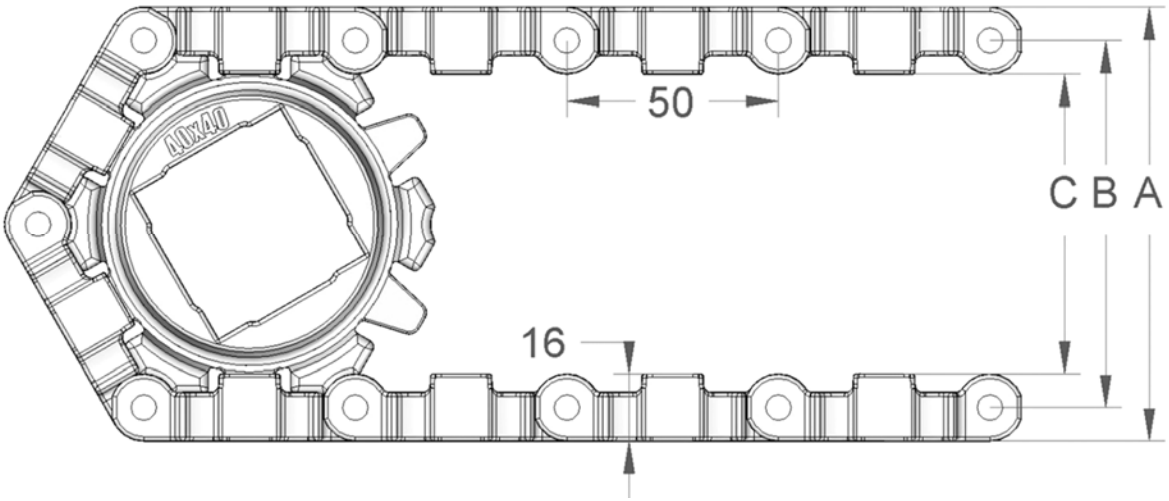

S.50-600

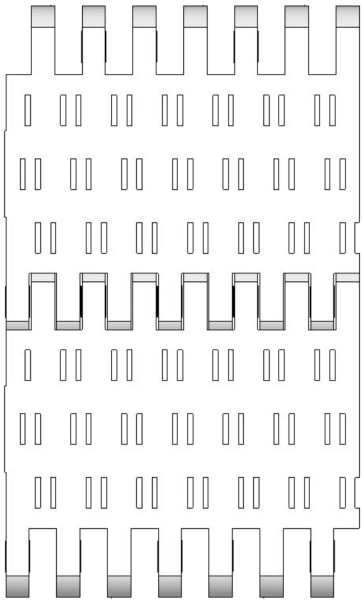

Belt Data		
Materials	Max. belt pull Lb/ft of width	Belt weight lb/square foot
Polyethylene (PE)	1200	1.43
Polypropylene (PP)	1600	1.43
Polyacetal (POM)	2400	2.05

Belt surface:	Perforated flat top.
Open area:	9 %. Biggest opening 1 x 6 mm (.04 x .24)
Strength:	The right belt for medium-heavy transportation.
Material/colour:	PE/nat, PP/white and grey. POM/blue.
Cleanability:	Excellent. FSIS.
Accessories:	25(.98), 50(1.97), 75(2.95) and 100 mm(3.94) flights. Extended and bent flights. 75(2.95) and 150 mm(5.91) supported flights. 50(1.97), 75(2.95), 100(3.94) and 150 mm(5.91) side guards. 50 mm(1.97) comb flights, friction top. Hold-down. Flights fitted with a round top Friction top.
Application:	Goods and other industries that handle products requiring drainage and very small openings.
Standard widths:	Increments of 10 mm(.39), e.g. 100(3.94), 110 mm(4.33)
Food approved	

Sprocket Data								
No. of teeth	A= Outside diameter	B= Pitch-diameter	C= Inside-diameter	Hub width:	Round bore		Square bore	
					mm	in.	mm	in.
6	103 (4.06)	89 (3.50)	73 (2.87)	20 (.79)	20/25/30/40	¾/1/1¼	25 /40	1½
8	136 (5.35)	122 (4.80)	106 (4.17)	35 (1.38)	25/30/40	1/1¼	25/40	1½
10	170 (6.69)	156 (6.14)	140 (5.51)	35 (1.38)	25/30/40	1/1¼	25/40/60	1½/2½
12	203 (7.99)	189 (7.44)	173 (6.81)	35 (1.38)	25/30/40/50/60	1/1¼	25/40/60	1½/2½
16	268 (10.55)	254 (10.00)	238 (9.37)	40 (1.57)	60/80		40/50/60/55/80	

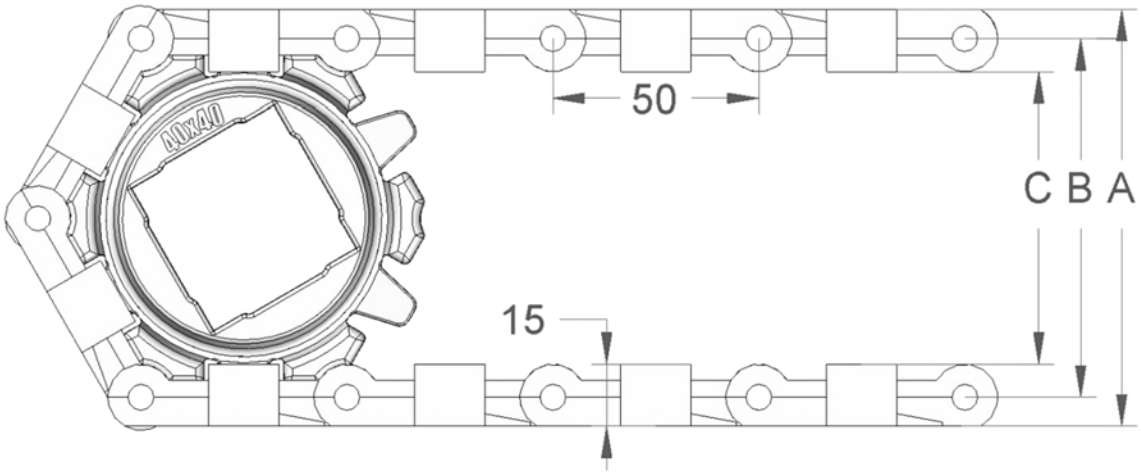

S.50-600F (friction)

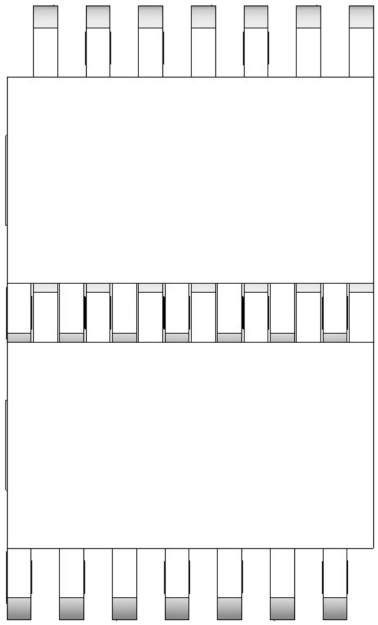

Belt Data		
Materials	Max. belt pull Lb/ft of width	Belt weight lb/square foot
Copolymer	1475	1.95

Belt surface:	Closed belt with a friction surface.
Open area:	Closed.
Strength:	The right belt for medium-heavy transportation.
Colour:	Nat/white
Cleanability:	Good.FSIS
Accessories:	25(.98), 50(1.97), 75(2.95) and 100 mm(3.94) flights. Extended and bent flights. 75(2.95) and 150 mm(5.91) supported flights. 50(1.97), 75(2.95), 100(3.94) and 150 mm(5.91) side guards. 50 mm(1.97) comb flights, Flights fitted with a round top
Application:	Transport of goods on a slightly inclined conveyor.
Standard widths:	Increments of 10 mm(.39), e.g. 100(3.94), 110 mm(4.33)
Food approved	

Sprocket Data								
No. of teeth	A= Outside diameter	B= Pitch-diameter	C= Inside-diameter	Hub width:	Round bore		Square bore	
					mm	in.	mm	in.
6	109 (4.29)	89 (3.50)	73 (2.87)	20 (.79)	20/25/30/40	¾/1/1¼	25 /40	1½
8	142 (5.59)	122 (4.80)	106 (4.17)	35 (1.38)	25/30/40	1/1¼	25/40	1½
10	176 (6.93)	156 (6.14)	140 (5.51)	35 (1.38)	25/30/40	1/1¼	25/40/60	1½/2½
12	209 (8.23)	189 (7.44)	173 (6.81)	35 (1.38)	25/30/40/50/60	1/1¼	25/40/60	1½/2½
16	274 (10.79)	254 (10.00)	238 (9.37)	40 (1.57)	60/80		40/50/60/55/80	

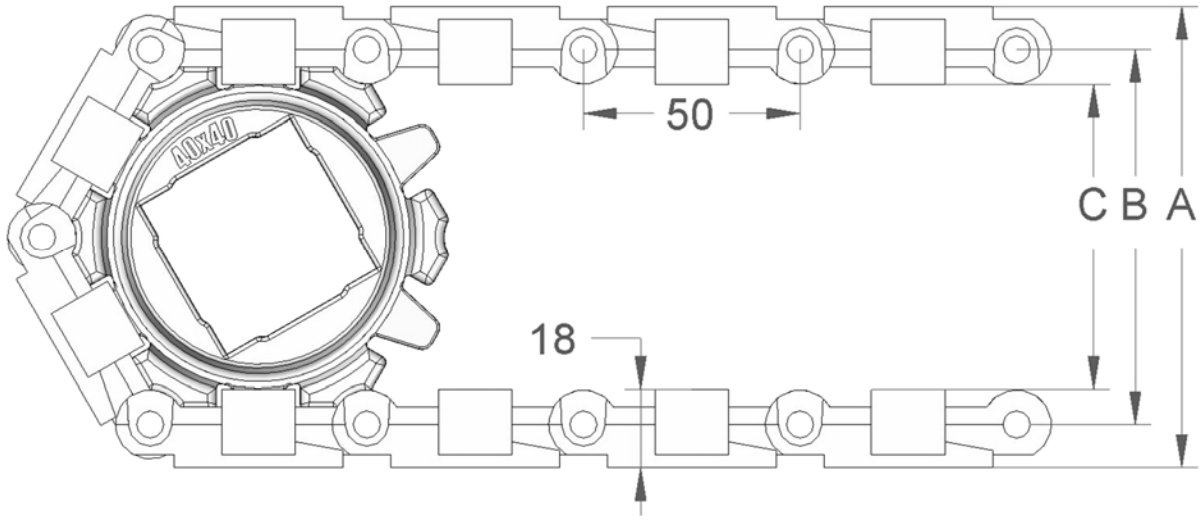

S.50-602

Belt Data		
Materials	Max. belt pull Lb/ft of width	Belt weight lb/square foot
Polyethylene (PE)	1200	1.43
Polypropylene (PP)	1600	1.43
Polyacetal (POM)	2400	2.25

Belt surface:	Flat top with 3 mm (.12) ribs.
Open area:	Closed.
Strength:	The right belt for medium-heavy transportation.
Material/colour:	PE/nat, PP/white and grey. POM/blue.
Cleanability:	Excellent. FSIS.
Accessories:	25(.98), 50(1.97), 75(2.95) and 100 mm(3.94) flights. Extended and bent flights. 75(2.95) and 150 mm(5.91) supported flights. 50(1.97), 75(2.95), 100(3.94) and 150 mm(5.91) side guards. 50 mm(1.97) comb flights, friction top. Flights fitted with a round top
Application:	Dairy, vegetables, poultry, snacks, sweet goods and other industries that handle small products.
Standard widths:	Increments of 10 mm(.39), e.g. 100(3.94), 110 mm(4.33)
Food approved	

Sprocket Data								
No. of teeth	A= Outside diameter	B= Pitch-diameter	C= Inside-diameter	Hub width:	Round bore		Square bore	
					mm	in.	mm	in.
6	109 (4.29)	89 (3.50)	73 (2.87)	20 (.79)	20/25/30/40	¾/1/1¼	25 /40	1½
8	142 (5.59)	122 (4.80)	106 (4.17)	35 (1.38)	25/30/40	1/1¼	25/40	1½
10	176 (6.93)	156 (6.14)	140 (5.51)	35 (1.38)	25/30/40	1/1¼	25/40/60	1½/2½
12	209 (8.23)	189 (7.44)	173 (6.81)	35 (1.38)	25/30/40/50/60	1/1¼	25/40/60	1½/2½
16	274 (10.79)	254 (10.00)	238 (9.37)	40 (1.57)	60/80		40/50/60/55/80	

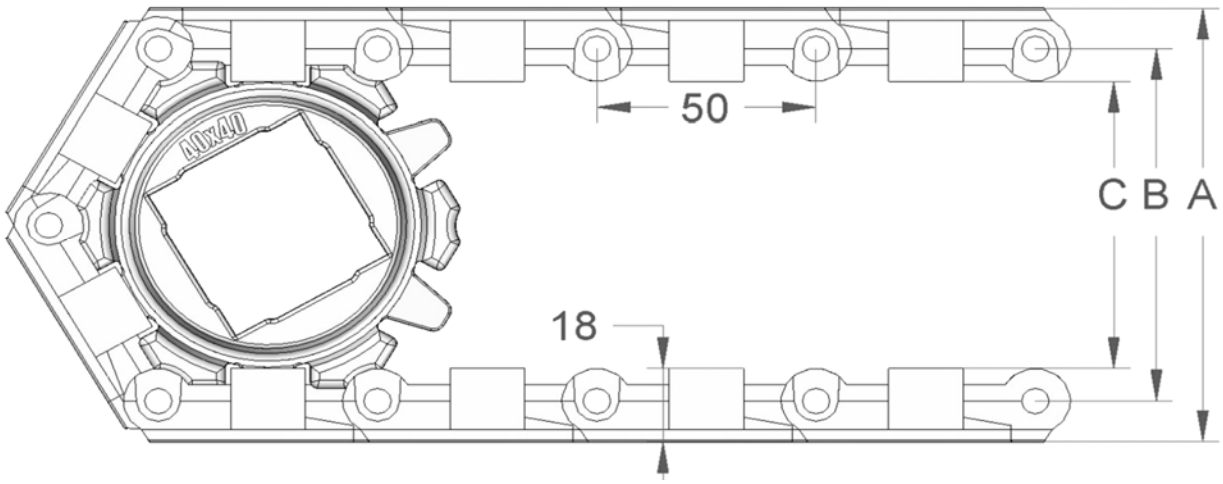

S.50-606

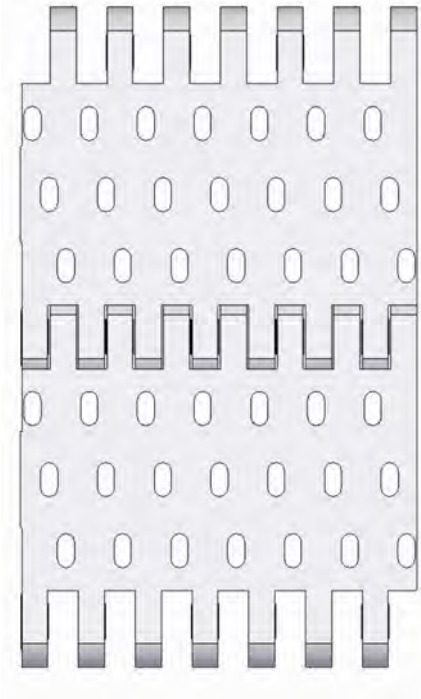

Belt Data		
Materials	Max. belt pull Lb/ft of width	Belt weight lb/square foot
Polyethylene (PE)	1200	1.43
Polypropylene (PP)	1600	1.43
Polyacetal (POM)	2400	2.25

Belt surface:	Perforated flat top.
Open area:	10%. Biggest opening 3 x 6 mm (.12 x .24)
Strength:	The right belt for medium-heavy transportation.
Material/colour:	PE/nat, PP/white and grey. POM/blue.
Cleanability:	Excellent. FSIS.
Accessories:	25(.98), 50(1.97), 75(2.95) and 100 mm(3.94) flights. Extended and bent flights. 75(2.95) and 150 mm(5.91) supported flights. 50(1.97), 75(2.95), 100(3.94) and 150 mm(5.91) side guards. 50 mm(1.97) comb flights, friction top. Flights fitted with a round top
Application:	Dairy, vegetables, poultry, snacks, sweet goods and other industries that handle products requiring drainage and small openings.
Standard widths:	Increments of 10 mm(.39), e.g. 100(3.94), 110 mm(4.33)
Food approved	

Sprocket Data								
No. of teeth	A= Outside diameter	B= Pitch-diameter	C= Inside-diameter	Hub width:	Round bore		Square bore	
					mm	in.	mm	in.
6	103 (4.06)	89 (3.50)	73 (2.87)	20 (.79)	20/25/30/40	¾/1/1¼	25 /40	1½
8	136 (5.35)	122 (4.80)	106 (4.17)	35 (1.38)	25/30/40	1/1¼	25/40	1½
10	170 (6.69)	156 (6.14)	140 (5.51)	35 (1.38)	25/30/40	1/1¼	25/40/60	1½/2½
12	203 (7.99)	189 (7.44)	173 (6.81)	35 (1.38)	25/30/40/50/60	1/1¼	25/40/60	1½/2½
16	268 (10.55)	254 (10.00)	238 (9.37)	40 (1.57)	60/80		40/50/60/55/80	

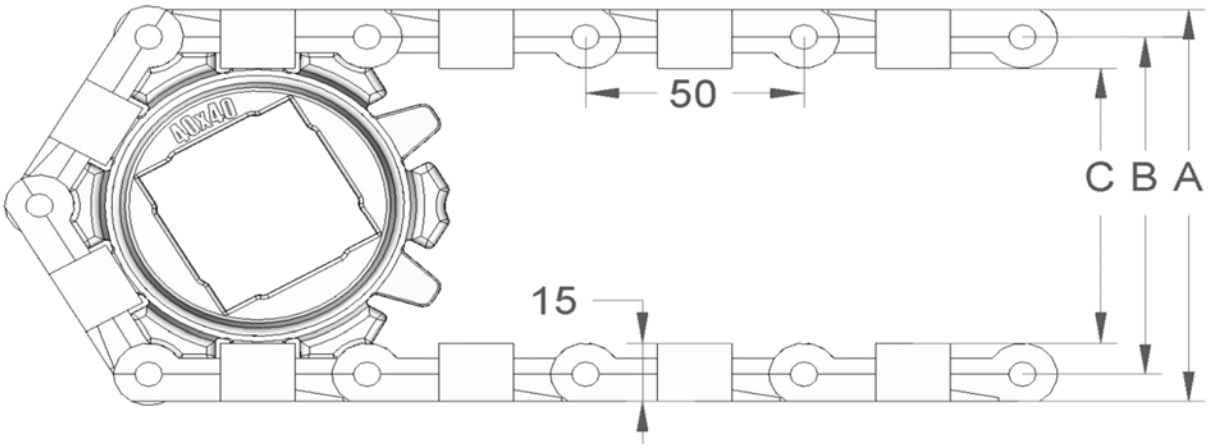

S.50-608

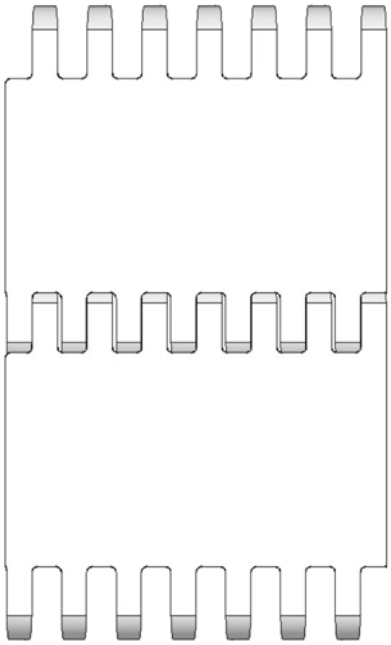

Belt Data		
Materials	Max. belt pull Lb/ft of width	Belt weight lb/square foot
Polyethylene (PE)	1200	1.43
Polypropylene (PP)	1600	1.43
Polyacetal (POM)	2400	2.25

Belt surface: Flat top.
Open area: Closed.
Strength: The right belt for medium-heavy transportation.
Material/colour: PE/nat, PP/white and grey. POM/blue.
Cleanability: Excellent. FSIS.
Accessories: 25(.98), 50(1.97), 75(2.95) and 100 mm(3.94) flights. Extended and bent flights. 75(2.95) and 150 mm(5.91) supported flights. 50(1.97), 75(2.95), 100(3.94) and 150 mm(5.91) side guards. 50 mm(1.97) comb flights, friction top. Flights fitted with a round top
Application: Dairy, vegetables, poultry, snacks, sweet goods and other industries that handle small products.
Standard widths: Increments of 10 mm(.39), e.g. 100(3.94), 110 mm(4.33)
Food approved

Sprocket Data								
No. of teeth	A= Outside diameter	B= Pitch-diameter	C= Inside-diameter	Hub width:	Round bore		Square bore	
					mm	in.	mm	in.
6	103 (4.06)	89 (3.50)	73 (2.87)	20 (.79)	20/25/30/40	¾/1/1¼	25 /40	1½
8	136 (5.35)	122 (4.80)	106 (4.17)	35 (1.38)	25/30/40	1/1¼	25/40	1½
10	170 (6.69)	156 (6.14)	140 (5.51)	35 (1.38)	25/30/40	1/1¼	25/40/60	1½/2½
12	203 (7.99)	189 (7.44)	173 (6.81)	35 (1.38)	25/30/40/50/60	1/1¼	25/40/60	1½/2½
16	268 (10.55)	254 (10.00)	238 (9.37)	40 (1.57)	60/80		40/50/60/55/80	

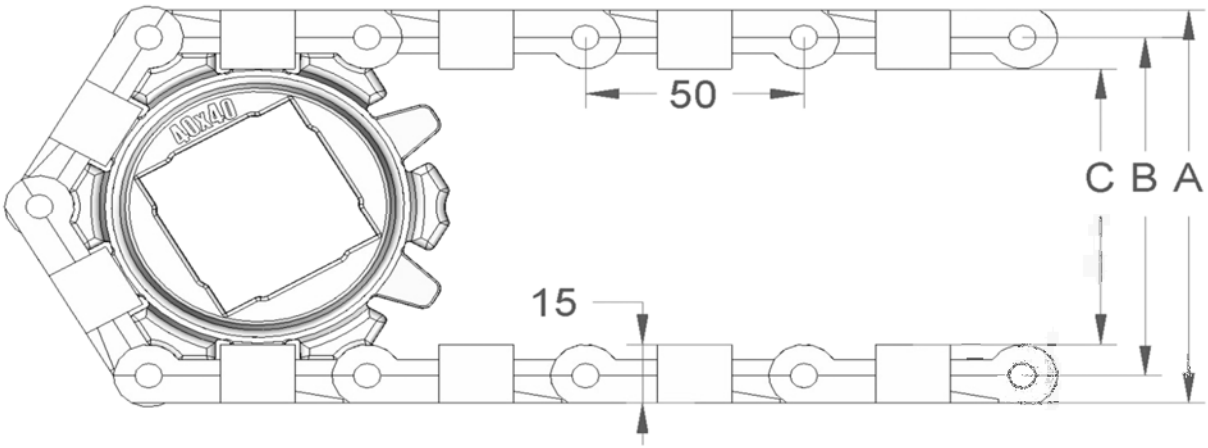

S.50-610

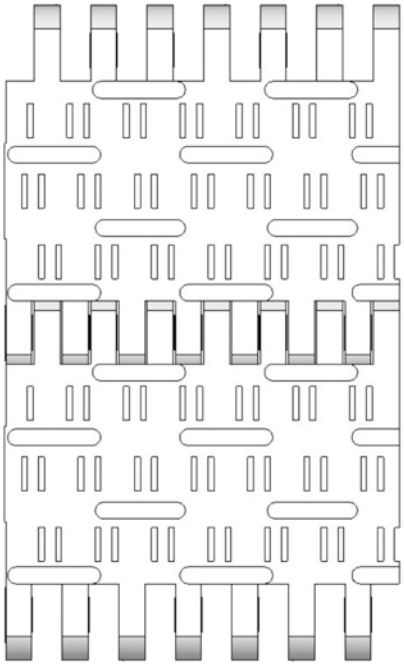

Belt Data		
Materials	Max. belt pull Lb/ft of width	Belt weight lb/square foot
Polyethylene (PE)	1200	1.43
Polypropylene (PP)	1600	1.43
Polyacetal (POM)	2400	2.25

Belt surface:	Perforated flat top with 1 mm (.04) flights.
Open area:	9%. Biggest opening 1 x 6 mm (.04 x .24).
Strength:	The right belt for medium-heavy transportation.
Material/colour:	PE/nat, PP/white and grey. POM/blue.
Cleanability:	Excellent. FSIS.
Accessories:	25(.98), 50(1.97), 75(2.95) and 100 mm(3.94) flights. Extended and bent flights. 75(2.95) and 150 mm(5.91) supported flights. 50(1.97), 75(2.95), 100(3.94) and 150 mm(5.91) side guards. 50 mm(1.97) comb flights, friction top. Flights fitted with a round top.
Application:	Dairy, vegetables, poultry, snacks, sweet goods and other industries that handle products requiring drainage and small openings.
Standard widths:	Increments of 10 mm(.39), e.g. 100(3.94), 110 mm(4.33)
Food approved	

Sprocket Data								
No. of teeth	A= Outside diameter	B= Pitch-diameter	C= Inside-diameter	Hub width:	Round bore		Square bore	
					mm	in.	mm	in.
6	105 (4.13)	89 (3.50)	73 (2.87)	20 (.79)	20/25/30/40	¾/1/1¼	25 /40	1½
8	138 (5.43)	122 (4.80)	106 (4.17)	35 (1.38)	25/30/40	1/1¼	25/40	1½
10	172 (6.77)	156 (6.14)	140 (5.51)	35 (1.38)	25/30/40	1/1¼	25/40/60	1½/2½
12	205 (8.07)	189 (7.44)	173 (6.81)	35 (1.38)	25/30/40/50/60	1/1¼	25/40/60	1½/2½
16	270 (10.63)	254 (10.00)	238 (9.37)	40 (1.57)	60/80		40/50/60/55/80	

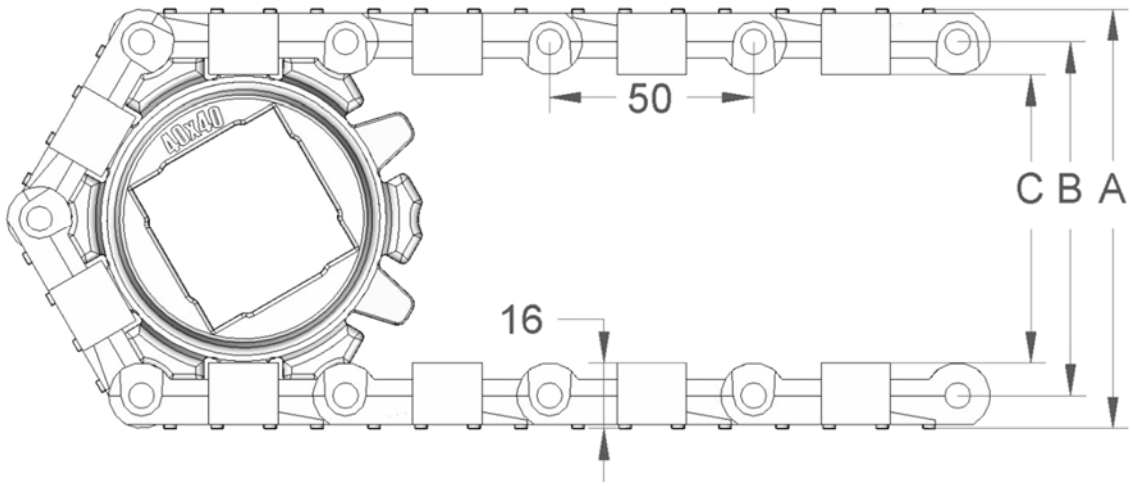

S.50-630

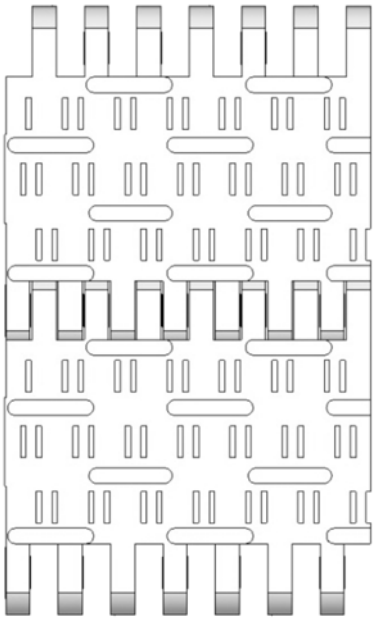

Belt Data		
Materials	Max. belt pull Lb/ft of width	Belt weight lb/square foot
Polyethylene (PE)	1200	1.43
Polypropylene (PP)	1600	1.43
Polyacetal (POM)	2400	2.25

Belt surface:	Perforated flat top with 3 mm (.12) flights.
Open area:	9%. Biggest opening 1 x 6 mm (.04 x .24)
Strength:	The right belt for medium-heavy transportation.
Material/colour:	PE/nat, PP/white and grey. POM/blue.
Cleanability:	Excellent. FSIS.
Accessories:	25(.98), 50(1.97), 75(2.95) and 100 mm(3.94) flights. Extended and bent flights. 75(2.95) and 150 mm(5.91) supported flights. 50(1.97), 75(2.95), 100(3.94) and 150 mm(5.91) side guards. 50 mm(1.97) comb flights, friction top. Hold-down. Flights fitted with a round top.
Application:	Dairy, vegetables, poultry, snacks, sweet goods and other industries that handle products requiring drainage and small openings.
Standard widths:	Increments of 10 mm(.39), e.g. 100(3.94), 110 mm(4.33)
Food approved	

Sprocket Data								
No. of teeth	A= Outside diameter	B= Pitch-diameter	C= Inside-diameter	Hub width:	Round bore		Square bore	
					mm	in.	mm	in.
6	109 (4.29)	89 (3.50)	73 (2.87)	20 (.79)	20/25/30/40	¾/1/1¼	25 /40	1½
8	142 (5.59)	122 (4.80)	106 (4.17)	35 (1.38)	25/30/40	1/1¼	25/40	1½
10	176 (6.93)	156 (6.14)	140 (5.51)	35 (1.38)	25/30/40	1/1¼	25/40/60	1½/2½
12	209 (8.23)	189 (7.44)	173 (6.81)	35 (1.38)	25/30/40/50/60	1/1¼	25/40/60	1½/2½
16	274 (10.79)	254 (10.00)	238 (9.37)	40 (1.57)	60/80		40/50/60/55/80	

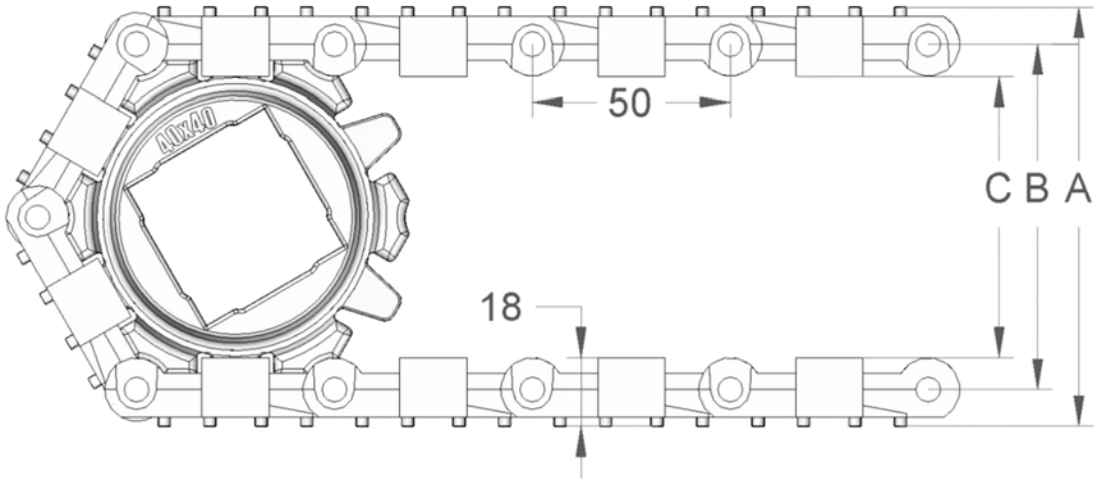

S.50-801

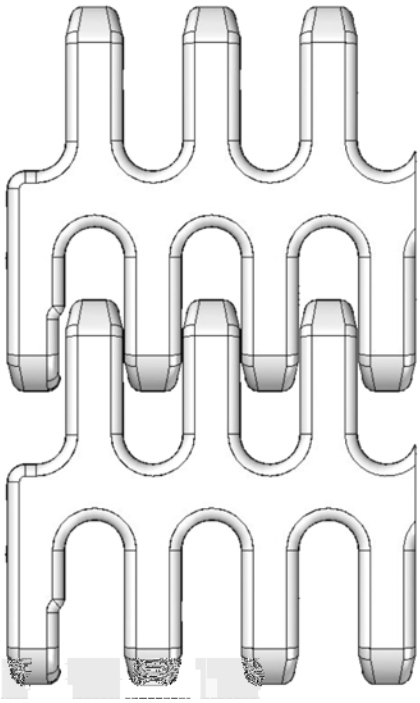

Belt Data		
Materials	Max. belt pull Lb/ft of width	Belt weight lb/square foot
Polyethylene (PE)	800	1.43
Polypropylene (PP)	940	1.43
Polyacetal (POM)	1385	2.05

Belt surface:	Open belt with a smooth surface
Open area:	24%. Biggest opening 10 x 12 mm (.39 x .47)
Strength:	The right belt for medium-heavy transportation.
Material/colour:	PE/nat, PP/white and grey. POM/blue.
Cleanability:	Excellent. FSIS.
Accessories:	3 (.12), 25(.98), 50(1.97), 75(2.95) and 100 mm(3.94) flights. Extended and bent flights. 75(2.95) and 150 mm(5.91) supported flights. 50(1.97), 75(2.95), 100(3.94) and 150 mm(5.91) side guards. Hold-down. Flights fitted with a round top.
Application:	Medium-heavy duty transportation, Red meat, poultry, seafood and transportation of raw materials (for further processing).
Standard widths:	Increments of 20 mm (.79), e.g. 100 (3.94), 120 mm (4.72) **Special widths available on request.**
Foood approved	

Sprocket Data								
No. of teeth	A= Outside diameter	B= Pitch-diameter	C= Inside-diameter	Hub width:	Round bore		Square bore	
					mm	in.	mm	in.
6	102 (4.02)	89 (3.50)	73 (2.87)	20 (.79)	20/25/30/40	¾/1/1¼	25 /40	1½
8	136 (5.35)	122 (4.80)	106 (4.17)	35 (1.38)	25/30/40	1/1¼	25/40	1½
10	171 (6.73)	156 (6.14)	140 (5.51)	35 (1.38)	25/30/40	1/1¼	25/40/60	1½/2½
12	203 (7.99)	189 (7.44)	173 (6.81)	35 (1.38)	25/30/40/50/60	1/1¼	25/40/60	1½/2½

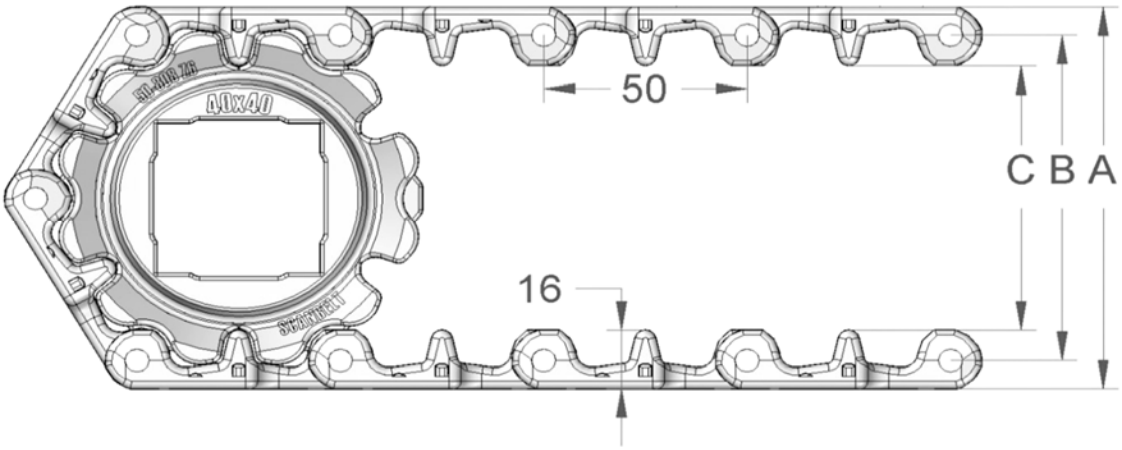

S.50-806

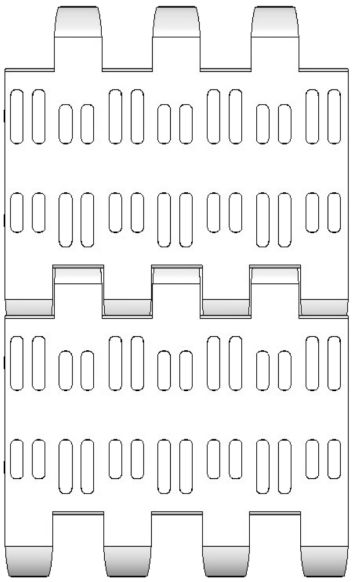

Belt Data		
Materials	Max. belt pull Lb/ft of width	Belt weight lb/square foot
Polyethylene (PE)	800	1.43
Polypropylene (PP)	940	1.43
Polyacetal (POM)	1385	2.05

Belt surface:	Open belt with a smooth surface
Open area:	20%. Biggest opening 2.5 x 11 mm (.10 x .43)
Strength:	The right belt for medium-heavy transportation.
Material/colour:	PE/nat, PP/white and grey. POM/blue.
Cleanability:	Excellent. FSIS.
Accessories:	3 (.12), 25(.98), 50(1.97), 75(2.95) and 100 mm(3.94) flights. Extended and bent flights. 75(2.95) and 150 mm(5.91) supported flights. 50(1.97), 75(2.95), 100(3.94) and 150 mm(5.91) side guards. Hold-down. Flights fitted with a round top.
Application:	Medium-heavy duty transportation, Dairy, vegetables, poultry, snacks, sweet goods and other industries that handle products requiring drainage and small openings.
Standard widths:	Increments of 20 mm (.79), e.g. 100 (3.94), 120 mm (4.72) **Special widths available on request.**
Food approved	

Sprocket Data								
No. of teeth	A= Outside diameter	B= Pitch-diameter	C= Inside-diameter	Hub width:	Round bore		Square bore	
					mm	in.	mm	in.
6	102 (4.02)	89 (3.50)	73 (2.87)	20 (.79)	20/25/30/40	¾/1/1¼	25 /40	1½
8	136 (5.35)	122 (4.80)	106 (4.17)	35 (1.38)	25/30/40	1/1¼	25/40	1½
10	171 (6.73)	156 (6.14)	140 (5.51)	35 (1.38)	25/30/40	1/1¼	25/40/60	1½/2½
12	203 (7.99)	189 (7.44)	173 (6.81)	35 (1.38)	25/30/40/50/60	1/1¼	25/40/60	1½/2½

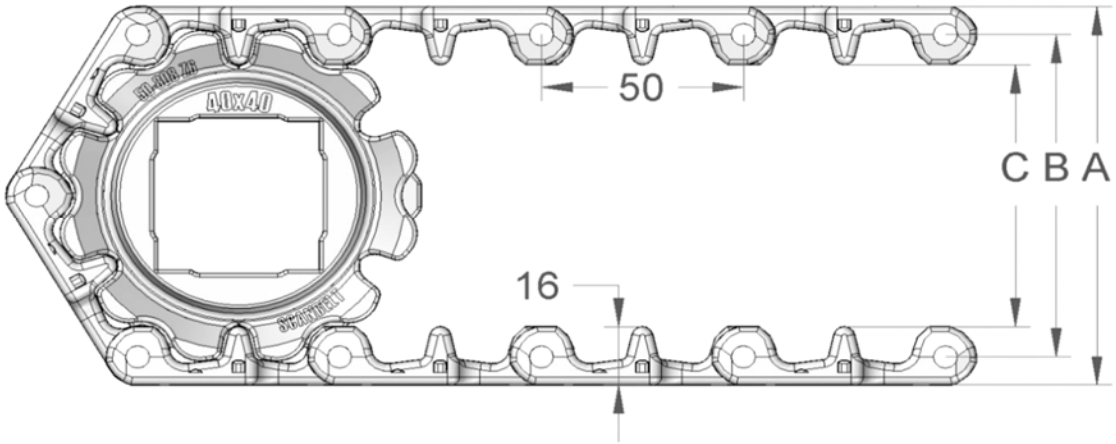

S.50-808

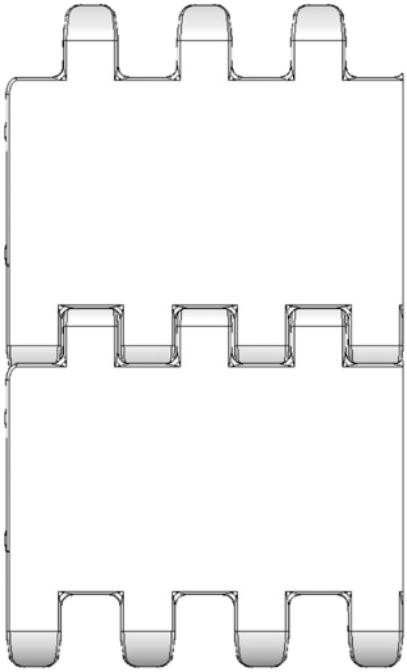

Belt Data		
Materials	Max. belt pull Lb/ft of width	Belt weight lb/square foot
Polyethylene (PE)	800	1.64
Polypropylene (PP)	940	1.64
Polyacetal (POM)	1385	2.46

Belt surface:	Flat top.
Open area:	Closed.
Strength:	The right belt for medium-heavy transportation.
Material/colour:	PE/nat, PP/white and grey. POM/blue.
Cleanability:	Excellent. FSIS.
Accessories:	3 (.12), 25(.98), 50(1.97), 75(2.95) and 100 mm(3.94) flights. Extended and bent flights. 75(2.95) and 150 mm(5.91) supported flights. 50(1.97), 75(2.95), 100(3.94) and 150 mm(5.91) side guards. Hold-down. Flights fitted with a round top.
Application:	Red meat, seafood, poultry, dairy and vegetable industries and trimming lines in general.
Standard widths:	Increments of 20 mm (.79), e.g. 100 (3.94), 120 mm (4.72) **Special widths available on request.**

Food approved

Sprocket Data								
No. of teeth	A= Outside diameter	B= Pitch-diameter	C= Inside-diameter	Hub width:	Round bore		Square bore	
					mm	in.	mm	in.
6	102 (4.02)	89 (3.50)	73 (2.87)	20 (.79)	20/25/30/40	¾/1/1¼	25 /40	1½
8	136 (5.35)	122 (4.80)	106 (4.17)	35 (1.38)	25/30/40	1/1¼	25/40	1½
10	171 (6.73)	156 (6.14)	140 (5.51)	35 (1.38)	25/30/40	1/1¼	25/40/60	1½/2½
12	203 (7.99)	189 (7.44)	173 (6.81)	35 (1.38)	25/30/40/50/60	1/1¼	25/40/60	1½/2½

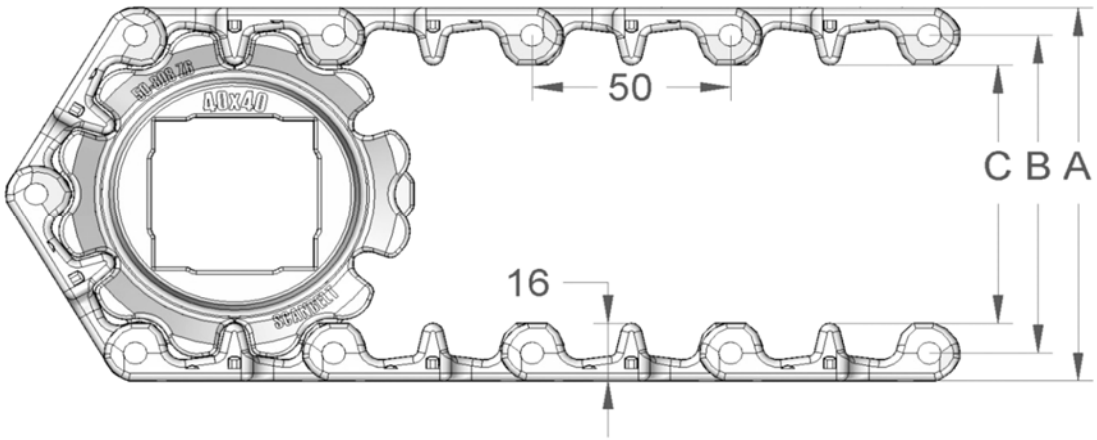

S.50-830

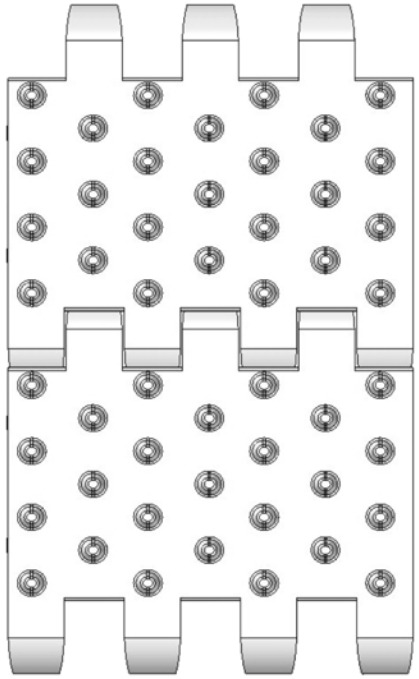

Belt Data		
Materials	Max. belt pull Lb/ft of width	Belt weight lb/square foot
Polyethylene (PE)	800	1.64
Polypropylene (PP)	940	1.64
Polyacetal (POM)	1385	2.46

Belt surface:	Structure top with 3 mm (.12) cones.
Open area:	Closed.
Strength:	The right belt for medium-heavy transportation.
Material/colour:	PE/nat, PP/white and grey. POM/blue.
Cleanability:	Excellent. FSIS.
Accessories:	3 (.12), 25(.98), 50(1.97), 75(2.95) and 100 mm(3.94) flights. Extended and bent flights. 75(2.95) and 150 mm(5.91) supported flights. 50(1.97), 75(2.95), 100(3.94) and 150 mm(5.91) side guards. Hold-down. Flights fitted with a round top.
Application:	Seafood, red meat, vegetable etc.
Standard widths:	Increments of 20 mm (.79), e.g. 100 (3.94), 120 mm (4.72) **Special widths available on request.**
Food approved	

Sprocket Data								
No. of teeth	A= Outside diameter	B= Pitch-diameter	C= Inside-diameter	Hub width:	Round bore		Square bore	
					mm	in.	mm	in.
6	108 (4.25)	89 (3.50)	73 (2.87)	20 (.79)	20/25/30/40	¾/1/1¼	25 /40	1½
8	142 (5.59)	122 (4.80)	106 (4.17)	35 (1.38)	25/30/40	1/1¼	25/40	1½
10	176 (6.93)	156 (6.14)	140 (5.51)	35 (1.38)	25/30/40	1/1¼	25/40/60	1½/2½
12	209 (8.23)	189 (7.44)	173 (6.81)	35 (1.38)	25/30/40/50/60	1/1¼	25/40/60	1½/2½

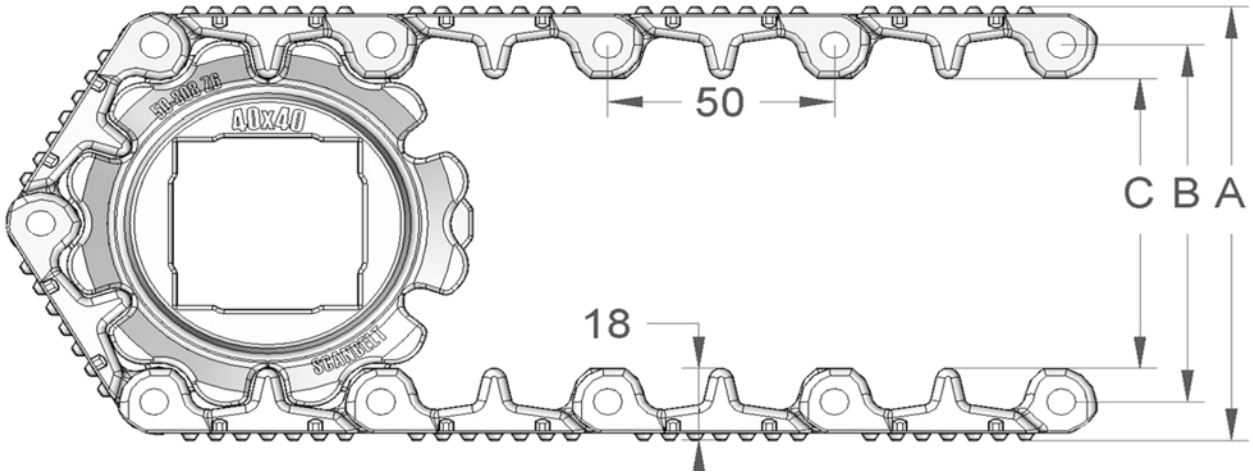

S.50-838

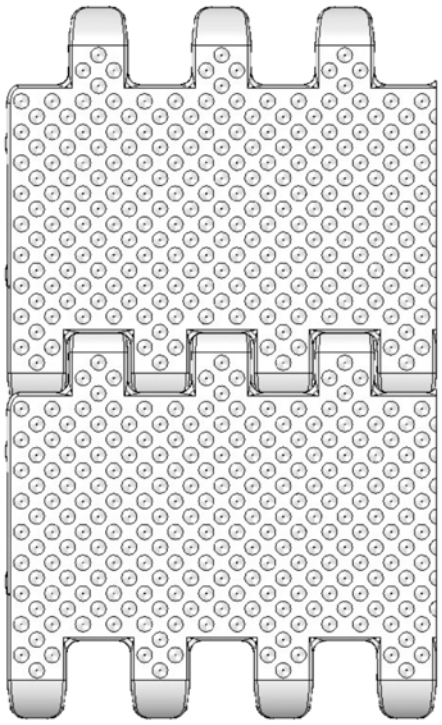

Belt Data		
Materials	Max. belt pull Lb/ft of width	Belt weight lb/square foot
Polyethylene (PE)	800	1.64
Polypropylene (PP)	940	1.64
Polyacetal (POM)	1385	2.46

Belt surface: Structure top with 3 mm (.12) cones.
Open area: Closed.
Strength: The right belt for medium-heavy transportation.
Material/colour: PE/nat, PP/white and grey. POM/blue.
Cleanability: Excellent. FSIS.
Accessories: 3 (.12), 25(.98), 50(1.97), 75(2.95) and 100 mm(3.94) flights. Extended and bent flights. 75(2.95) and 150 mm(5.91) supported flights. 50(1.97), 75(2.95), 100(3.94) and 150 mm(5.91) side guards. Hold-down. Flights fitted with a round top.
Application: Seafood, red meat, vegetable, sweets etc.
Standard widths: Increments of 20 mm (.79), e.g. 100 (3.94), 120 mm (4.72) **Special widths available on request.**

Food approved

Sprocket Data								
No. of teeth	A= Outside diameter	B= Pitch-diameter	C= Inside-diameter	Hub width:	Round bore		Square bore	
					mm	in.	mm	in.
6	108 (4.25)	89 (3.50)	73 (2.87)	20 (.79)	20/25/30/40	¾/1/1¼	25 /40	1½
8	142 (5.59)	122 (4.80)	106 (4.17)	35 (1.38)	25/30/40	1/1¼	25/40	1½
10	176 (6.93)	156 (6.14)	140 (5.51)	35 (1.38)	25/30/40	1/1¼	25/40/60	1½/2½
12	209 (8.23)	189 (7.44)	173 (6.81)	35 (1.38)	25/30/40/50/60	1/1¼	25/40/60	1½/2½

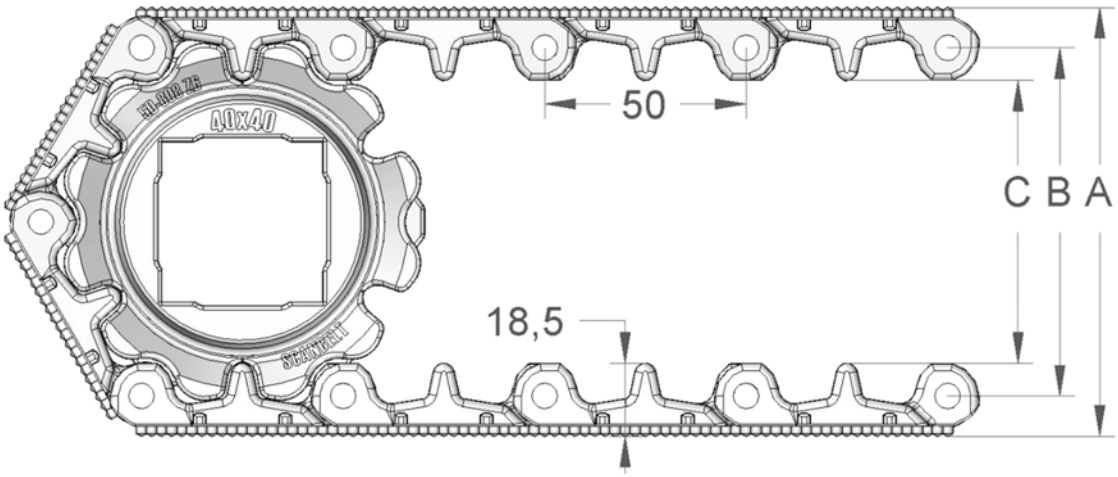

S.50-906

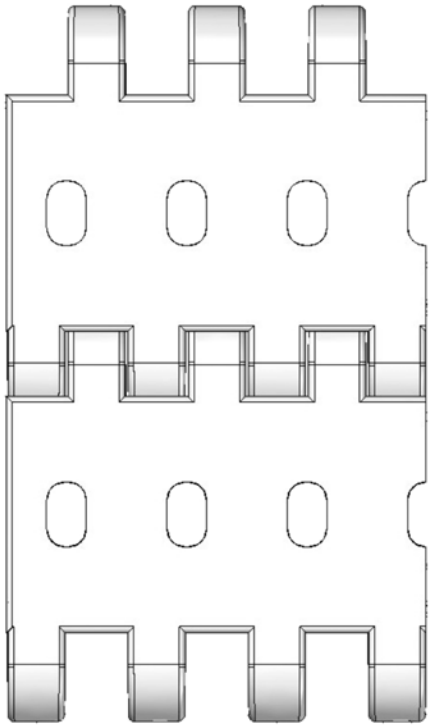

Belt Data		
Materials	Max. belt pull Lb/ft of width	Belt weight lb/square foot
Polyethylene (PE)	3225	2.66
Polypropylene (PP)	4000	2.66
Polyacetal (POM)	6880	3.89

Belt surface:	Perforated flat top.
Open area:	13 %. Biggest opening 7 x 11 mm (.28 x .43)
Strength:	The right belt for very heavy applications.
Material/colour:	PP, POM/black.
Cleanability:	Good.
Accessories:	25 mm (.98) flight.
Application:	Very heavy transportation. Assembling belt for cars. Truck loading systems.
Standard widths:	Increments of 20 mm (.79), e.g. 100 (3.94), 120 mm (4.72) **Special widths available on request.**

Sprocket Data								
No. of teeth	A= Outside diameter	B= Pitch-diameter	C= Inside-diameter	Hub width:	Round bore		Square bore	
					mm	in.	mm	in.
12	210 (8.27)	191 (7.52)	172 (6.77)	40 (1.57)	40/60		60/80/90	
16	273 (10.75)	254 (10.00)	235 (9.25)	40 (1.57)			60/80/90	
18	307 (12.09)	288 (11.34)	269 (10.59)	40 (1.57)	60		60/80/90	

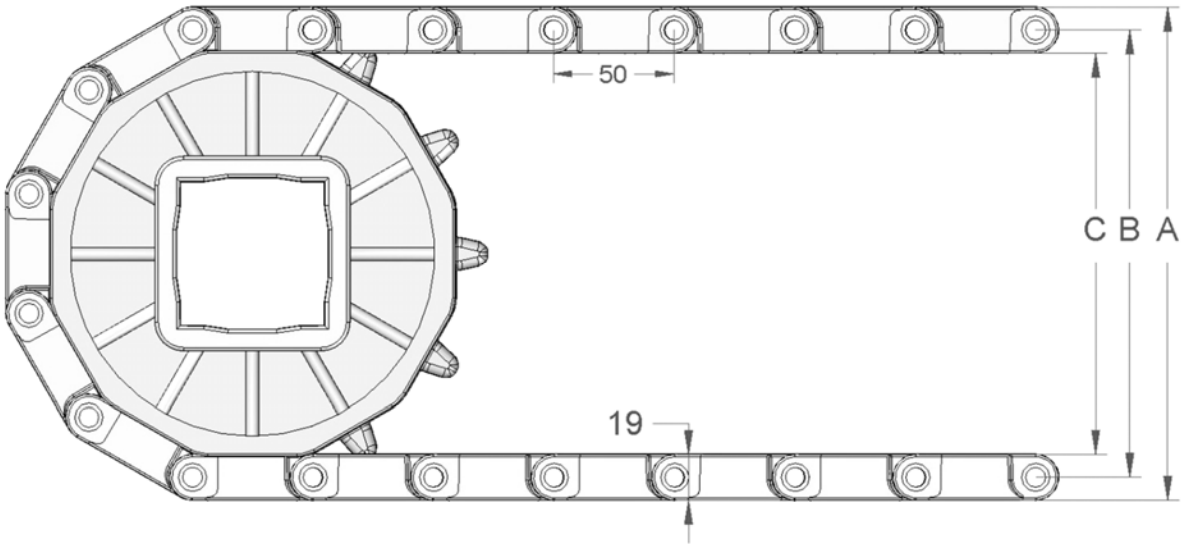

S.50-908

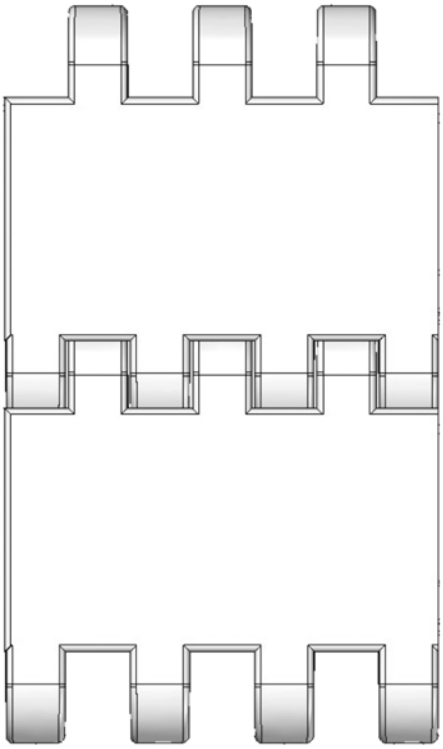

Belt Data		
Materials	Max. belt pull Lb/ft of width	Belt weight lb/square foot
Polyethylene (PE)	3225	2.66
Polypropylene (PP)	4000	2.87
Polyacetal (POM)	6880	4.30

Belt surface:	Flat top.
Open area:	Closed.
Strength:	The right belt for very heavy applications.
Material/colour:	PP, POM/black.
Cleanability:	Good.
Accessories:	25 mm (.98) flight.
Application:	Very heavy transportation. Assembling belt for cars. Truck loading systems.
Standard widths:	Increments of 20 mm (.79), e.g. 100 (3.94), 120 mm (4.72) **Special widths available on request.**

Sprocket Data								
No. of teeth	A= Outside diameter	B= Pitch-diameter	C= Inside-diameter	Hub width:	Round bore		Square bore	
					mm	in.	mm	in.
12	210 (8.27)	191 (7.52)	172 (6.77)	40 (1.57)	40/60		60/80/90	
16	273 (10.75)	254 (10.00)	235 (9.25)	40 (1.57)			60/80/90	
18	307 (12.09)	288 (11.34)	269 (10.59)	40 (1.57)	60		60/80/90	

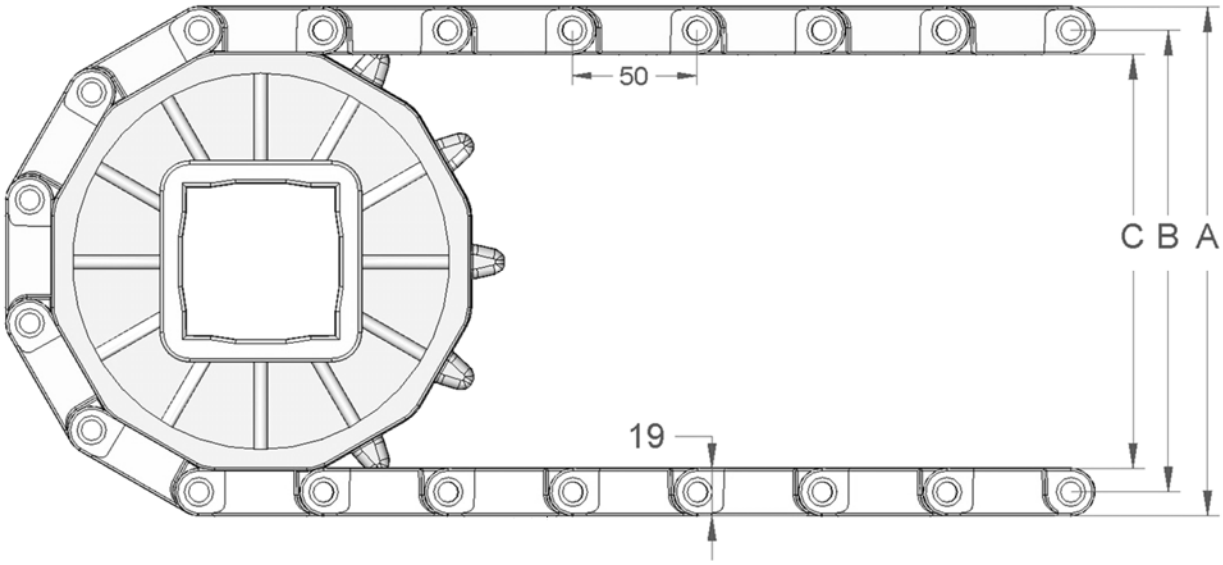

S.50-930

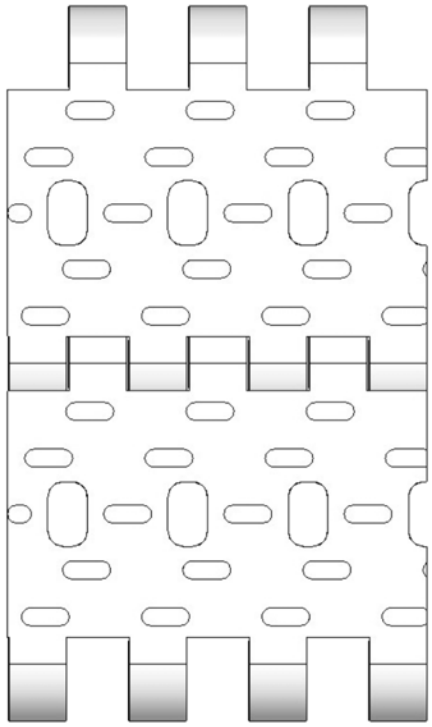

Belt Data		
Materials	Max. belt pull Lb/ft of width	Belt weight lb/square foot
Polyethylene (PE)	3225	2.87
Polypropylene (PP)	4000	2.87
Polyacetal (POM)	6880	4.30

Belt surface:	Perforated flat top with 3 mm (.12) flights.
Open area:	13 %. Biggest opening 7 x 11 mm (.28 x .43)
Strength:	The right belt for very heavy applications.
Material/colour:	PP, POM/black.
Cleanability:	Good.
Accessories:	25 mm (.98) flight.
Application:	Very heavy transportation. Assembling belt for cars. Truck loading systems.
Standard widths:	Increments of 20 mm (.79), e.g. 100 (3.94), 120 mm (4.72) **Special widths available on request.**

Sprocket Data								
No. of teeth	A= Outside diameter	B= Pitch-diameter	C= Inside-diameter	Hub width:	Round bore		Square bore	
					mm	in.	mm	in.
12	216 (8.50)	191 (7.52)	172 (6.77)	40 (1.57)	40/60		60/80/90	
16	279 (10.98)	254 (10.00)	235 (9.25)	40 (1.57)			60/80/90	
18	313 (12.32)	288 (11.34)	269 (10.59)	40 (1.57)	60		60/80/90	

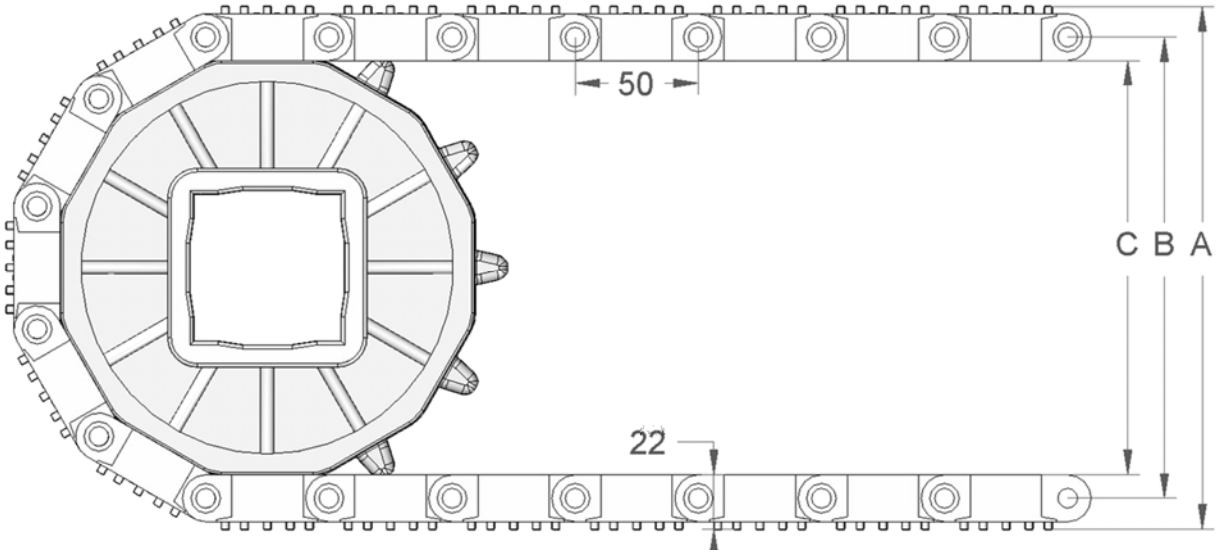

S.50-938

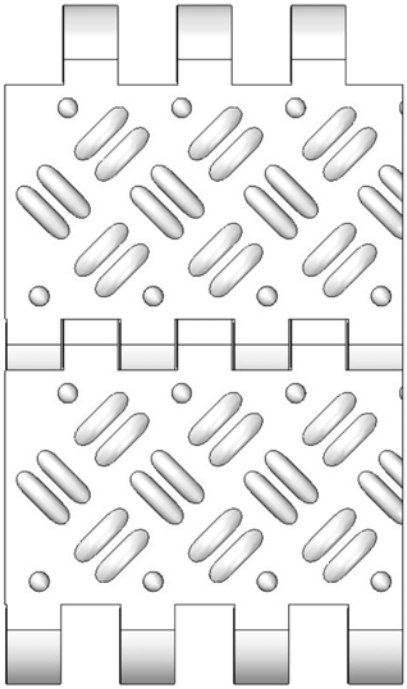

Belt Data		
Materials	Max. belt pull Lb/ft of width	Belt weight lb/square foot
Polyethylene (PE)	3225	2.87
Polypropylene (PP)	4000	2.87
Polyacetal (POM)	6880	4.30

Belt surface:	Closed with 3 mm (.12) non skid pattern.
Open area:	Closed.
Strength:	The right belt for very heavy applications.
Material/colour:	PP, POM/black.
Cleanability:	Good.
Accessories:	25 mm (.98) flight.
Application:	Very heavy transportation. Assembling belt for cars. Truck loading systems.
Standard widths:	Increments of 20 mm (.79), e.g. 100 (3.94), 120 mm (4.72) **Special widths available on request**

Sprocket Data								
No. of teeth	A= Outside diameter	B= Pitch-diameter	C= Inside-diameter	Hub width:	Round bore		Square bore	
					mm	in.	mm	in.
12	216 (8.50)	191 (7.52)	172 (6.77)	40 (1.57)	40/60		60/80/90	
16	279 (10.98)	254 (10.00)	235 (9.25)	40 (1.57)			60/80/90	
18	313 (12.32)	288 (11.34)	269 (10.59)	40 (1.57)	60		60/80/90	

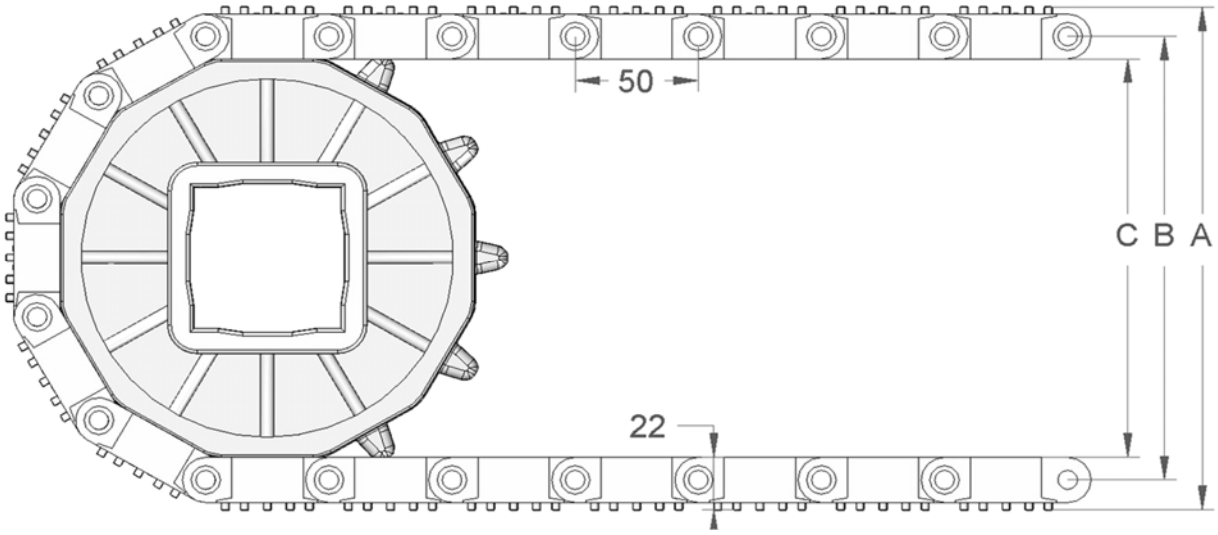

5. Belt S.75

Pitch 75mm (2.95”)

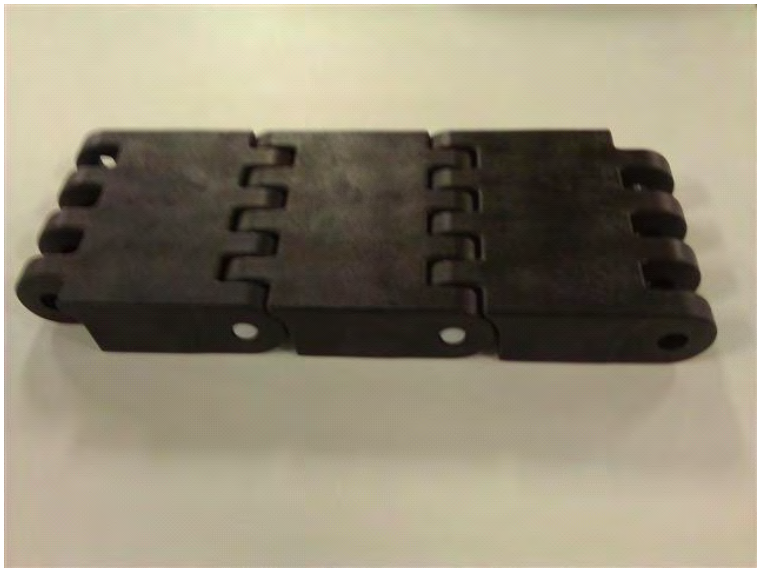

S.75-908

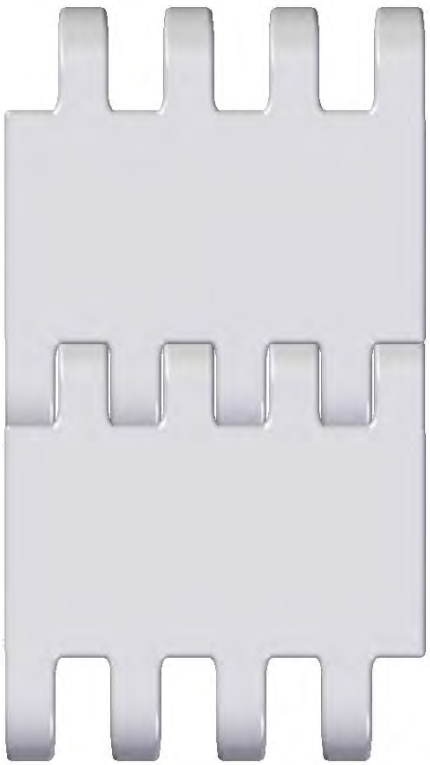

Belt Data		
Materials	Max. belt pull Lb/ft of width	Belt weight lb/square foot
Polyacetal (POM)	10,750	6.76

Belt surface:	Closed flat top.
Open area:	Closed.
Strength:	The right belt for very heavy applications.
Material/colour:	POM/black.
Cleanability:	Good.
Accessories:	50 mm comb flight, 40 mm side guards.
Application:	Very heavy transportation. Assembling belt for cars. Truck loading systems.
Standard widths:	Increments of 25 mm, e.g. 100, 125 mm etc

Sprocket Data								
No. of teeth	A= Outside diameter	B= Pitch-diameter	C= Inside-diameter	Hub width:	Round bore		Square bore	
All sprockets are machined				upon request	mm	in.	mm	in.
For ex. 15	386 (15.20”)	356 (14.02”)	326 (12.83”)				130x130	

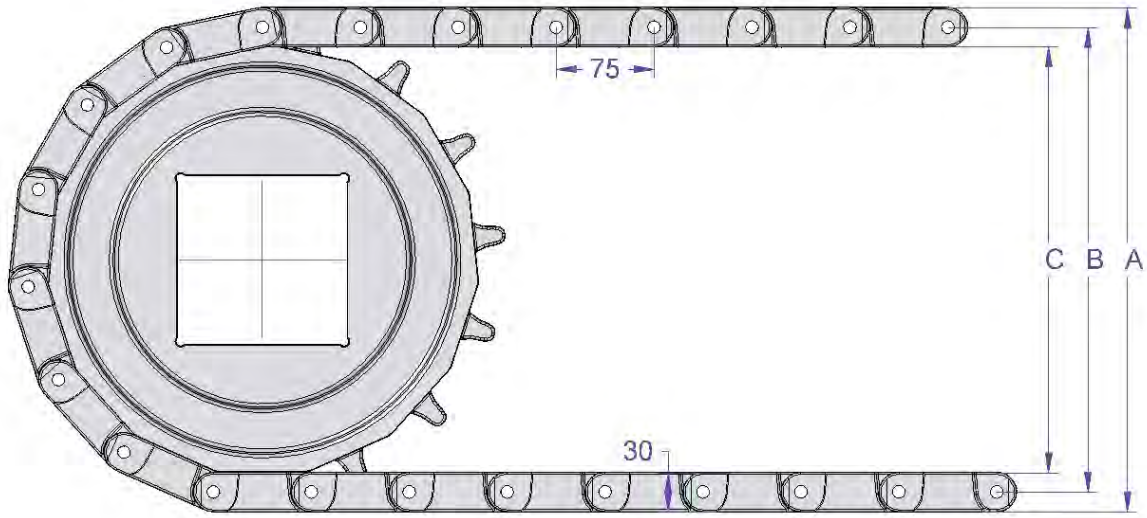

S.75-938

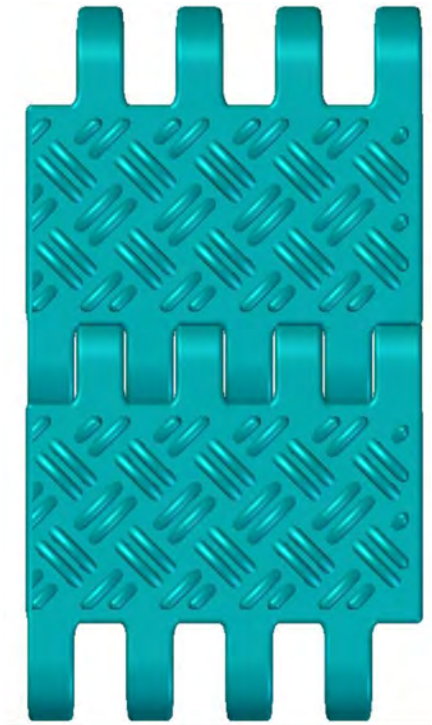

Belt Data		
Materials	Max. belt pull Lb/ft of width	Belt weight lb/square foot
Polyacetal (POM)	10,750	6.76

Belt surface:	Closed with 3 mm (.12) non skid pattern.
Open area:	Closed.
Strength:	The right belt for very heavy applications.
Material/colour:	POM/black.
Cleanability:	Good.
Accessories:	50 mm comb flight, 40 mm side guards.
Application:	Very heavy transportation. Assembling belt for cars. Truck loading systems.
Standard widths:	Increments of 25 mm, e.g. 100, 125 mm etc

Sprocket Data								
No. of teeth	A= Outside diameter	B= Pitch-diameter	C= Inside-diameter	Hub width:	Round bore		Square bore	
All sprockets are machined				40	mm	in.	mm	in.
For ex. 12	314	280	250				60/80/90	

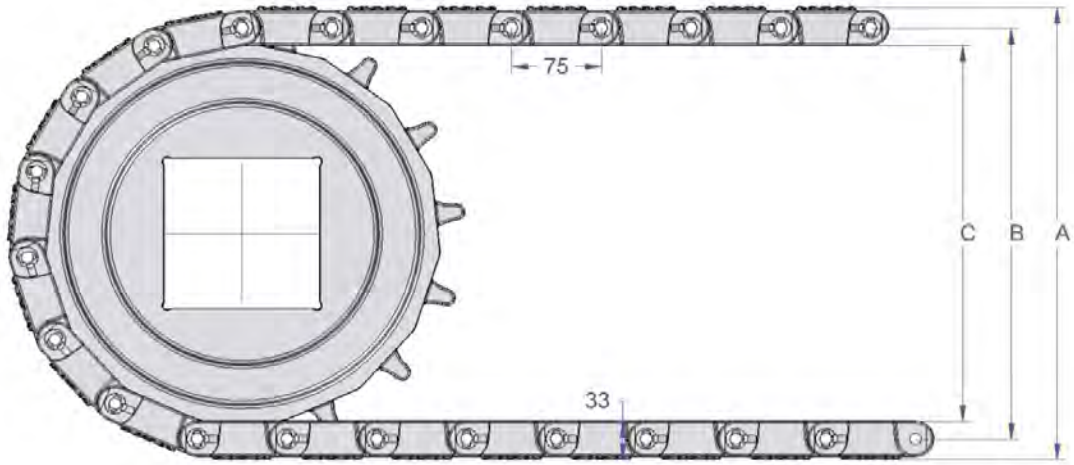

6. S.25 Radius Belt

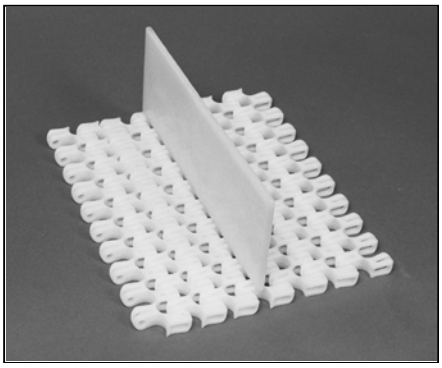

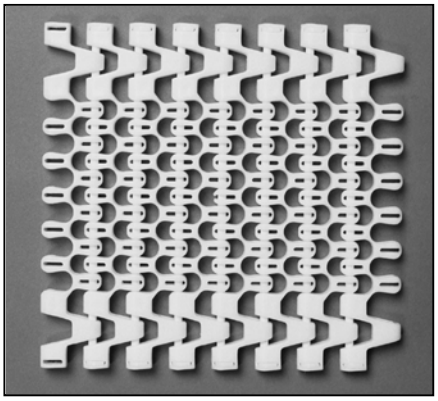

S.101

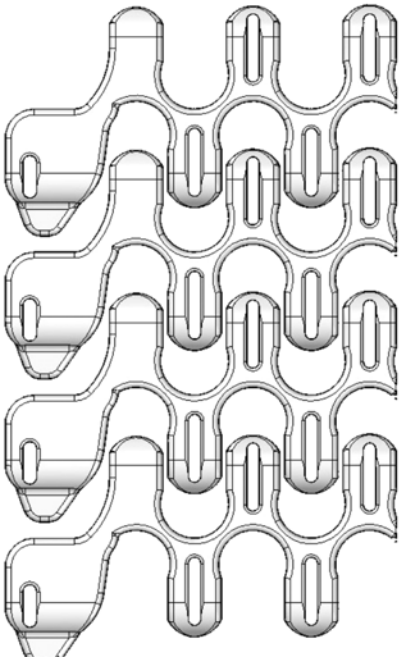

Belt Data.			
Belt material	Rods	Max. belt pull Lb	Belt weight lb/square foot
Polyacetal (POM)	PP Nylon	165 265	1.43 1.43
Polypropylene (PP)	PP Nylon	132 200	.92 .92

Belt surface:	Smooth.
Open area:	52 %
Strength:	The ideal choice for medium weight.
Material/colour:	POM, PP
Cleanability:	Good
Accessories:	25 (.98), 50 (1.97) and 75 (2.95) mm flights, friction top, hooks or tabs.
Application:	Spiral coolers, radius conveyors.
Construction:	Side modules, centre modules.
Width interval:	Normally 20 mm (.79) eg 210 (8.27), 230 mm (9.06)
Inner radius:	Collapse factor – see next page.
Food approved	

Sprocket Data								
No. of teeth	A= Outside diameter	B= Pitch-diameter	C= Inside-diameter	Hub width:	Round bore		Square bore	
					mm	in.	mm	in.
8	78 (3.07)	66 (2.60)	54 (2.13)	20 (.79)	20/25	1	25	
12	108 (4.25)	96 (3.78)	84 (3.31)	20 (.79)	20/25/30/40	¾/1/1¼	25/40	1½
20	173 (6.81)	161 (6.34)	149 (5.87)	35 (1.38)	25/30/40	1/1¼	25/40	1½

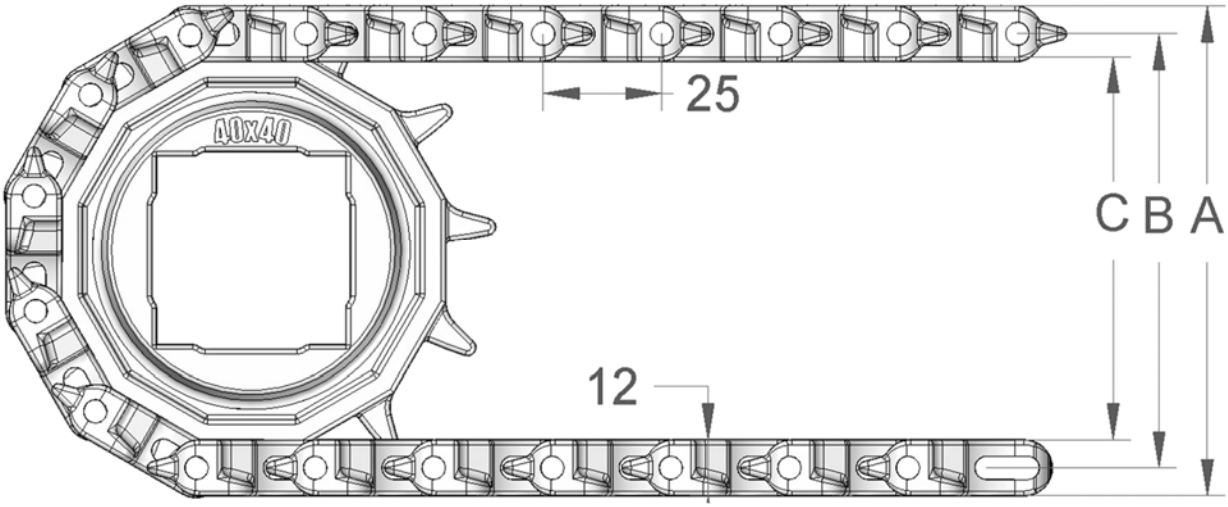

S.101 - 25 mm. Radius belt dimensions.

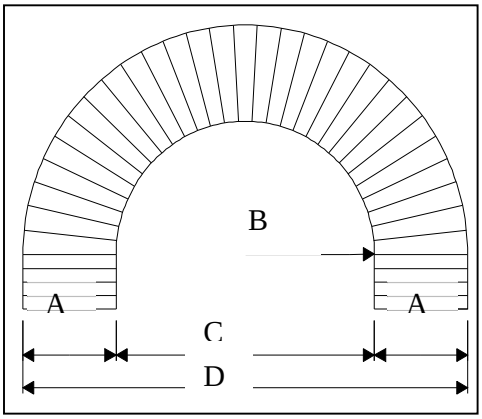

A = Standard belt width
B = Inner radius
C = Inner diameter
D = Outer diameter

A	**4.21**	**8.27**	**11.50**	**15.51**	**19.57**	**23.62**	**27.64**	**31.69**	**35.71**	**39.80**
B	5.91	11.81	17.72	25.59	33.46	40.75	49.21	57.48	66.14	75.00
C	11.81	23.62	35.43	51.18	64.96	79.53	96.46	112.99	130.31	148.03
D	20.24	40.16	58.43	82.20	104.09	126.77	151.73	176.38	201.73	227.64

Standard width – Radius belts

Belt width	Min.inner radius	Belt width	Min.inner radius
4.21	5.91	**23.62**	40.75
5.04	7.09	24.41	42.32
5.83	8.27	25.24	43.90
6.65	9.45	26.06	45.67
7.44	10.63	26.85	47.44
8.27	11.81	**27.64**	49.21
9.06	12.99	28.46	50.79
9.88	14.57	29.29	52.36
10.67	16.14	30.08	53.94
11.50	17.72	30.91	55.71
12.28	19.29	**31.69**	57.48
13.11	20.87	32.52	59.25
13.90	22.44	33.31	61.02
14.72	24.02	34.13	62.80
15.51	25.59	34.92	64.37
16.30	27.17	**35.71**	66.14
17.13	28.74	36.54	67.91
17.91	30.31	37.36	69.69
18.78	31.89	38.19	71.46
19.57	33.46	38.98	73.23
20.39	34.84	**39.80**	75.00
21.18	36.22	43.86	83.66
22.01	37.80	47.91	92.52
22.80	39.37	51.97	102.17

S-101

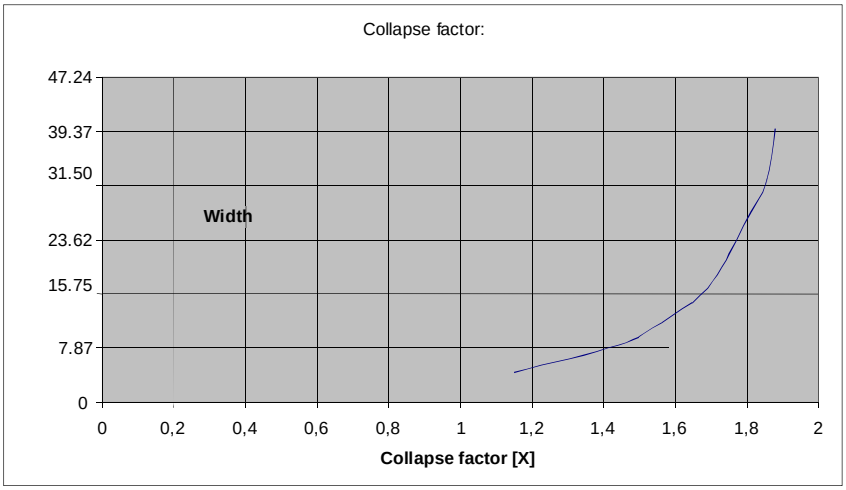

Collapse factor = $\frac{\text{min. inner radius}}{\text{belt width}}$

Min. inner radius = collapse factor x belt width.

Hook measurement for S.101 Turned inside.

S.101 – Distance for hooks turned inside – (mm)

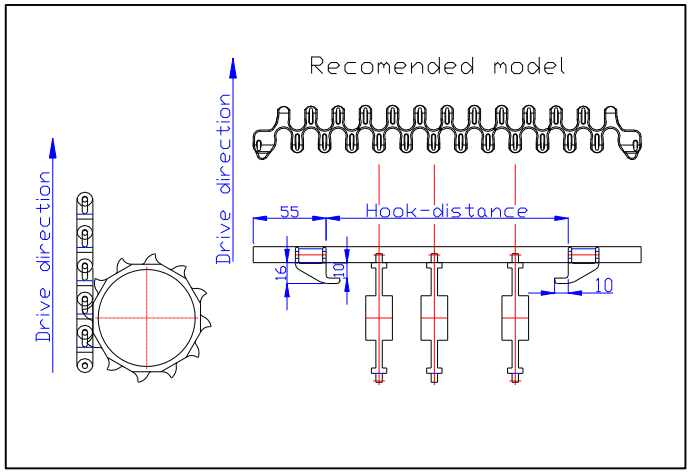

Belt width																																												
128	-																																											
148	-	38																																										
169	-	38	59																																									
189	-	38	59	79																																								
210	-	38	59	79	100																																							
230	-	38	59	79	100	120																																						
251	-	38	59	79	100	120	141																																					
271	-	38	59	79	100	120	141	161																																				
292	-	38	59	79	100	120	141	161	182																																			
312	-	38	59	79	100	120	141	161	182	202																																		
333	-	38	59	79	100	120	141	161	182	202	223																																	
353	-	38	59	79	100	120	141	161	182	202	223	243																																
374	-	38	59	79	100	120	141	161	182	202	223	243	264																															
394	-	38	59	79	100	120	141	161	182	202	223	243	264	284																														
414	-	38	59	79	100	120	141	161	182	202	223	243	264	284	304																													
435	-	38	59	79	100	120	141	161	182	202	223	243	264	284	304	325																												
455	-	38	59	79	100	120	141	161	182	202	223	243	264	284	304	325	345																											
477	-	38	59	79	100	120	141	161	182	202	223	243	264	284	304	325	345	367																										
497	-	38	59	79	100	120	141	161	182	202	223	243	264	284	304	325	345	367	387																									
518	-	38	59	79	100	120	141	161	182	202	223	243	264	284	304	325	345	367	387	408																								
538	-	38	59	79	100	120	141	161	182	202	223	243	264	284	304	325	345	367	387	408	428																							
559	-	38	59	79	100	120	141	161	182	202	223	243	264	284	304	325	345	367	387	408	428	449																						
579	-	38	59	79	100	120	141	161	182	202	223	243	264	284	304	325	345	367	387	408	428	449	469																					
600	-	38	59	79	100	120	141	161	182	202	223	243	264	284	304	325	345	367	387	408	428	449	469	490																				
620	-	38	59	79	100	120	141	161	182	202	223	243	264	284	304	325	345	367	387	408	428	449	469	490	510																			
641	-	38	59	79	100	120	141	161	182	202	223	243	264	284	304	325	345	367	387	408	428	449	469	490	510	531																		
662	-	38	59	79	100	120	141	161	182	202	223	243	264	284	304	325	345	367	387	408	428	449	469	490	510	531	552																	
682	-	38	59	79	100	120	141	161	182	202	223	243	264	284	304	325	345	367	387	408	428	449	469	490	510	531	552	572																
702	-	38	59	79	100	120	141	161	182	202	223	243	264	284	304	325	345	367	387	408	428	449	469	490	510	531	552	572	592															
723	-	38	59	79	100	120	141	161	182	202	223	243	264	284	304	325	345	367	387	408	428	449	469	490	510	531	552	572	592	613														
744	-	38	59	79	100	120	141	161	182	202	223	243	264	284	304	325	345	367	387	408	428	449	469	490	510	531	552	572	592	613	634													
764	-	38	59	79	100	120	141	161	182	202	223	243	264	284	304	325	345	367	387	408	428	449	469	490	510	531	552	572	592	613	634	654												
785	-	38	59	79	100	120	141	161	182	202	223	243	264	284	304	325	345	367	387	408	428	449	469	490	510	531	552	572	592	613	634	654	675											
805	-	38	59	79	100	120	141	161	182	202	223	243	264	284	304	325	345	367	387	408	428	449	469	490	510	531	552	572	592	613	634	654	675	695										
826	-	38	59	79	100	120	141	161	182	202	223	243	264	284	304	325	345	367	387	408	428	449	469	490	510	531	552	572	592	613	634	654	675	695	716									
846	-	38	59	79	100	120	141	161	182	202	223	243	264	284	304	325	345	367	387	408	428	449	469	490	510	531	552	572	592	613	634	654	675	695	716	736								
867	-	38	59	79	100	120	141	161	182	202	223	243	264	284	304	325	345	367	387	408	428	449	469	490	510	531	552	572	592	613	634	654	675	695	716	736	757							
887	-	38	59	79	100	120	141	161	182	202	223	243	264	284	304	325	345	367	387	408	428	449	469	490	510	531	552	572	592	613	634	654	675	695	716	736	757	777						
907	-	38	59	79	100	120	141	161	182	202	223	243	264	284	304	325	345	367	387	408	428	449	469	490	510	531	552	572	592	613	634	654	675	695	716	736	757	777	797					
928	-	38	59	79	100	120	141	161	182	202	223	243	264	284	304	325	345	367	387	408	428	449	469	490	510	531	552	572	592	613	634	654	675	695	716	736	757	777	797	818				
949	-	38	59	79	100	120	141	161	182	202	223	243	264	284	304	325	345	367	387	408	428	449	469	490	510	531	552	572	592	613	634	654	675	695	716	736	757	777	797	818	839			
970	-	38	59	79	100	120	141	161	182	202	223	243	264	284	304	325	345	367	387	408	428	449	469	490	510	531	552	572	592	613	634	654	675	695	716	736	757	777	797	818	839	860		
990	-	38	59	79	100	120	141	161	182	202	223	243	264	284	304	325	345	367	387	408	428	449	469	490	510	531	552	572	592	613	634	654	675	695	716	736	757	777	797	818	839	860	880	
1011	-	38	59	79	100	120	141	161	182	202	223	243	264	284	304	325	345	367	387	408	428	449	469	490	510	531	552	572	592	613	634	654	675	695	716	736	757	777	797	818	839	860	880	901
	-	38	59	79	100	120	141	161	182	202	223	243	264	284	304	325	345	367	387	408	428	449	469	490	510	531	552	572	592	613	634	654	675	695	716	736	757	777	797	818	839	860	880	901

Hook Distance

Hook measurement for S.101 Turned outside.

S.101 – Distance for hooks turned outside – (mm)

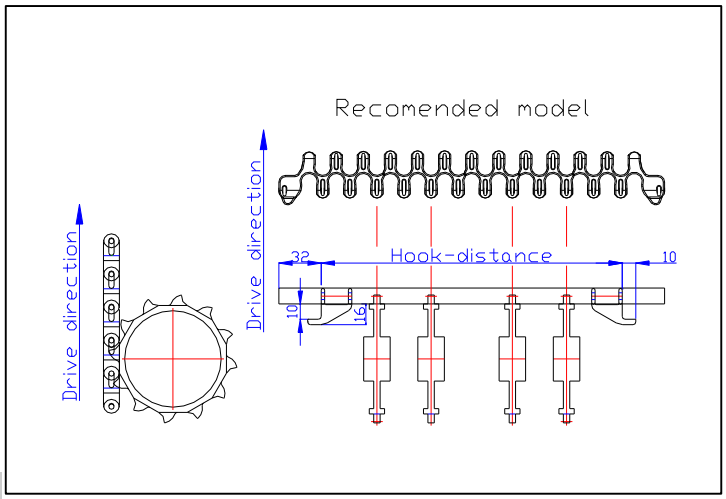

Belt width	64	84	105	125	146	167	188	208	229	249	270	290	311	331	351	372	392	413	433	454	474	495	515	536	556	577	598	618	638	659	680	700	721	741	762	782	803	823	843	864	885	906	926	947
128	64																																											
148	64	84																																										
169	64	84	105																																									
189	64	84	105	125																																								
210	64	84	105	125	146																																							
230	64	84	105	125	146	167																																						
251	64	84	105	125	146	167	188																																					
271	64	84	105	125	146	167	188	208																																				
292	64	84	105	125	146	167	188	208	229																																			
312	64	84	105	125	146	167	188	208	229	249																																		
333	64	84	105	125	146	167	188	208	229	249	270																																	
353	64	84	105	125	146	167	188	208	229	249	270	290																																
374	64	84	105	125	146	167	188	208	229	249	270	290	311																															
394	64	84	105	125	146	167	188	208	229	249	270	290	311	331																														
414	64	84	105	125	146	167	188	208	229	249	270	290	311	331	351																													
435	64	84	105	125	146	167	188	208	229	249	270	290	311	331	351	372																												
455	64	84	105	125	146	167	188	208	229	249	270	290	311	331	351	372	392																											
477	64	84	105	125	146	167	188	208	229	249	270	290	311	331	351	372	392	413																										
497	64	84	105	125	146	167	188	208	229	249	270	290	311	331	351	372	392	413	433																									
518	64	84	105	125	146	167	188	208	229	249	270	290	311	331	351	372	392	413	433	454																								
538	64	84	105	125	146	167	188	208	229	249	270	290	311	331	351	372	392	413	433	454	474																							
559	64	84	105	125	146	167	188	208	229	249	270	290	311	331	351	372	392	413	433	454	474	495																						
579	64	84	105	125	146	167	188	208	229	249	270	290	311	331	351	372	392	413	433	454	474	495	515																					
600	64	84	105	125	146	167	188	208	229	249	270	290	311	331	351	372	392	413	433	454	474	495	515	536																				
620	64	84	105	125	146	167	188	208	229	249	270	290	311	331	351	372	392	413	433	454	474	495	515	536	556																			
641	64	84	105	125	146	167	188	208	229	249	270	290	311	331	351	372	392	413	433	454	474	495	515	536	556	577																		
662	64	84	105	125	146	167	188	208	229	249	270	290	311	331	351	372	392	413	433	454	474	495	515	536	556	577	598																	
682	64	84	105	125	146	167	188	208	229	249	270	290	311	331	351	372	392	413	433	454	474	495	515	536	556	577	598	618																
702	64	84	105	125	146	167	188	208	229	249	270	290	311	331	351	372	392	413	433	454	474	495	515	536	556	577	598	618	638															
723	64	84	105	125	146	167	188	208	229	249	270	290	311	331	351	372	392	413	433	454	474	495	515	536	556	577	598	618	638	659														
744	64	84	105	125	146	167	188	208	229	249	270	290	311	331	351	372	392	413	433	454	474	495	515	536	556	577	598	618	638	659	680													
764	64	84	105	125	146	167	188	208	229	249	270	290	311	331	351	372	392	413	433	454	474	495	515	536	556	577	598	618	638	659	680	700												
785	64	84	105	125	146	167	188	208	229	249	270	290	311	331	351	372	392	413	433	454	474	495	515	536	556	577	598	618	638	659	680	700	721											
805	64	84	105	125	146	167	188	208	229	249	270	290	311	331	351	372	392	413	433	454	474	495	515	536	556	577	598	618	638	659	680	700	721	741										
826	64	84	105	125	146	167	188	208	229	249	270	290	311	331	351	372	392	413	433	454	474	495	515	536	556	577	598	618	638	659	680	700	721	741	762									
846	64	84	105	125	146	167	188	208	229	249	270	290	311	331	351	372	392	413	433	454	474	495	515	536	556	577	598	618	638	659	680	700	721	741	762	782								
867	64	84	105	125	146	167	188	208	229	249	270	290	311	331	351	372	392	413	433	454	474	495	515	536	556	577	598	618	638	659	680	700	721	741	762	782	803							
887	64	84	105	125	146	167	188	208	229	249	270	290	311	331	351	372	392	413	433	454	474	495	515	536	556	577	598	618	638	659	680	700	721	741	762	782	803	823						
907	64	84	105	125	146	167	188	208	229	249	270	290	311	331	351	372	392	413	433	454	474	495	515	536	556	577	598	618	638	659	680	700	721	741	762	782	803	823	843					
928	64	84	105	125	146	167	188	208	229	249	270	290	311	331	351	372	392	413	433	454	474	495	515	536	556	577	598	618	638	659	680	700	721	741	762	782	803	823	843	864				
949	64	84	105	125	146	167	188	208	229	249	270	290	311	331	351	372	392	413	433	454	474	495	515	536	556	577	598	618	638	659	680	700	721	741	762	782	803	823	843	864	885			
970	64	84	105	125	146	167	188	208	229	249	270	290	311	331	351	372	392	413	433	454	474	495	515	536	556	577	598	618	638	659	680	700	721	741	762	782	803	823	843	864	885	906		
990	64	84	105	125	146	167	188	208	229	249	270	290	311	331	351	372	392	413	433	454	474	495	515	536	556	577	598	618	638	659	680	700	721	741	762	782	803	823	843	864	885	906	926	
1011	64	84	105	125	146	167	188	208	229	249	270	290	311	331	351	372	392	413	433	454	474	495	515	536	556	577	598	618	638	659	680	700	721	741	762	782	803	823	843	864	885	906	926	947

Hook Distance

S.101Track191

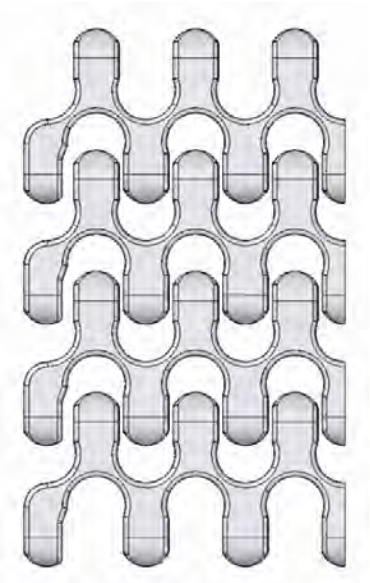

	Belt Data.			
Belt material	Rods	Max. belt pull **Straight** (lb)	Max. belt pull **Curve** (lb).	Belt weight lb/square foot
Polyacetal (POM)	Nylon	880	230	1.43
Polypropylene (PP)	PP	550	150	.92

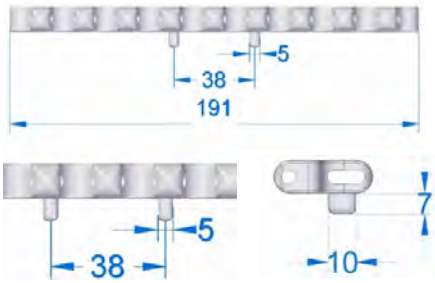

Belt surface: Smooth.
Open area: 52 %
Strength: Ideal for medium weight curves.
Material/colour: POM, PP
Cleanability: Good
Accessories:
Application: Radius conveyors.
Contruction: Single modules – standard width of 7.52”
Inner radius: 13.188”
Food approved

Sprocket Data								
No. of teeth	A= Outside diameter	B= Pitch-diameter	C= Inside-diameter	Hub width:	Round bore		Square bore	
					mm	in.	mm	in.
8	78 (3.07)	66 (2.60)	54 (2.13)	20 (.79)	20/25	1	25	1½
12	108 (4.25)	96 (3.78)	84 (3.31)	20 (.79)	20/25/30/40	¾/1/1¼	25/40	1½
20	173 (6.81)	161 6.34)	149 (5.87)	35 (1.38)	25/30/40/50/60	1/1¼	25/40/60	1½/2½

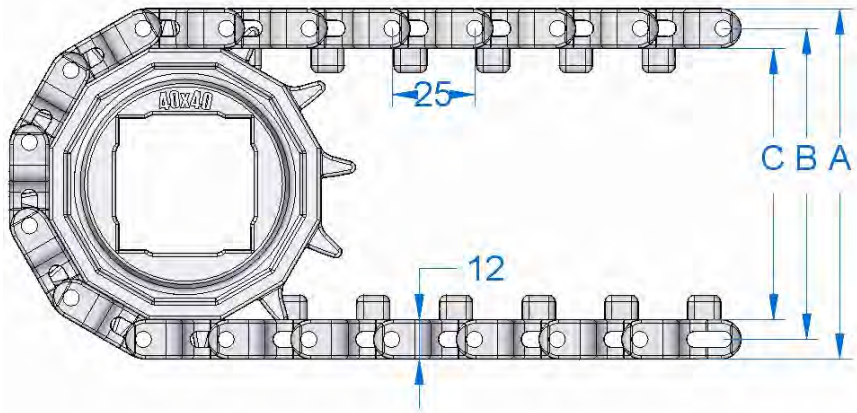

J.101

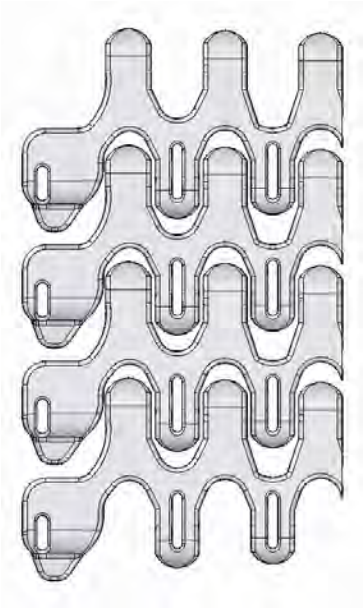

Belt Data.			
Belt material	Rods	Max. belt pull (lb)	Belt weight lb/square foot
Polyacetal (POM)	PP Nylon	350 550	1.43 1.43
Polypropylene (PP)	PP Nylon	Please contact Sparks Belting	

Belt surface:	Smooth.
Open area:	52 %
Strength:	Ideal for heavy duty spirals and J curves.
Material/colour:	POM, PP
Cleanability:	Good
Accessories:	25 (.98), 50 (1.97) and 75 (2.95) mm flights, friction top, hooks or tabs.
Application:	Spiral coolers, radius conveyors in “J-curves”.
Contruction:	Side modules, centre modules.
Width interval:	20 mm (.79”). E.g: 210 (8.27”), 230 (9.06”)mm etc.
Inner radius:	Please see next page.
Food approved	

Sprocket Data								
No. of teeth	A= Outside diameter	B= Pitch-diameter	C= Inside-diameter	Hub width:	Round bore		Square bore	
					mm	in.	mm	in.
8	78 (3.07)	66 (2.60)	54 (2.13)	20 (.79)	20/25	1	25	1½
12	108 (4.25)	96 (3.78)	84 (3.31)	20 (.79)	20/25/30/40	¾/1/1¼	25/40	1½
20	173 (6.81)	161 6.34)	149 (5.87)	35 (1.38)	25/30/40/50/60	1/1¼	25/40/60	1½/2½

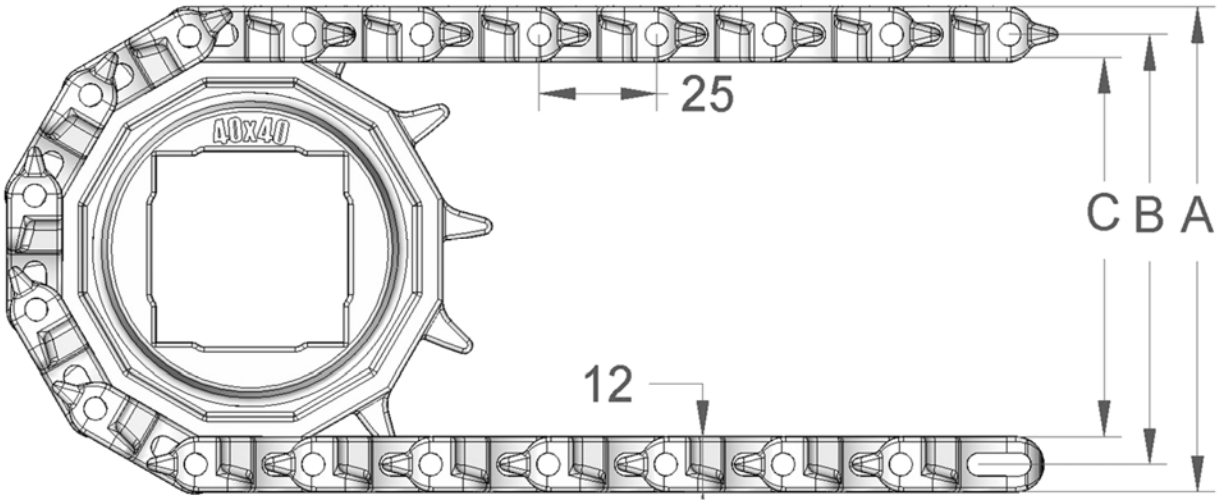

J.101 - 25 mm. Radius belt dimensions.

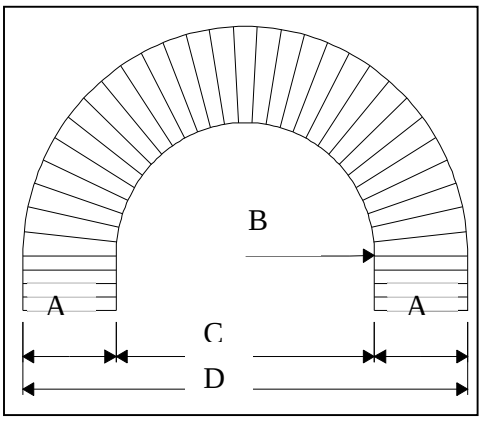

A = Standard belt width
B = Inner radius
C = Inner diameter
D = Outer diameter

A	**4.21**	**8.27**	**11.50**	**15.51**	**19.57**	**23.62**	**27.64**	**31.69**	**35.71**	**39.80**
B	5.91	11.81	17.72	25.59	33.46	40.75	49.21	57.48	66.14	75.00
C	11.81	23.62	35.43	51.18	64.96	79.53	96.46	112.99	130.31	148.03
D	20.24	40.16	58.43	82.20	104.09	126.77	151.73	176.38	201.73	227.64

Standard width – Radius belts

Belt width.	Min.inner radius.	Belt width.	Min.inner radius
4.21	5.91	**23.62**	40.75
5.04	7.09	24.41	42.32
5.83	8.27	25.24	43.90
6.65	9.45	26.06	45.67
7.44	10.63	26.85	47.44
8.27	11.81	**27.64**	49.21
9.06	12.99	28.46	50.79
9.88	14.57	29.29	52.36
10.67	16.14	30.08	53.94
11.50	17.72	30.91	55.71
12.28	19.29	**31.69**	57.48
13.11	20.87	32.52	59.25
13.90	22.44	33.31	61.02
14.72	24.02	34.13	62.80
15.51	25.59	34.92	64.37
16.30	27.17	**35.71**	66.14
17.13	28.74	36.54	67.91
17.91	30.31	37.36	69.69
18.78	31.89	38.19	71.46
19.57	33.46	38.98	73.23
20.39	34.84	**39.80**	75.00
21.18	36.22	43.86	83.66
22.01	37.80	47.91	92.52
22.80	39.37	51.97	102.17

J-101

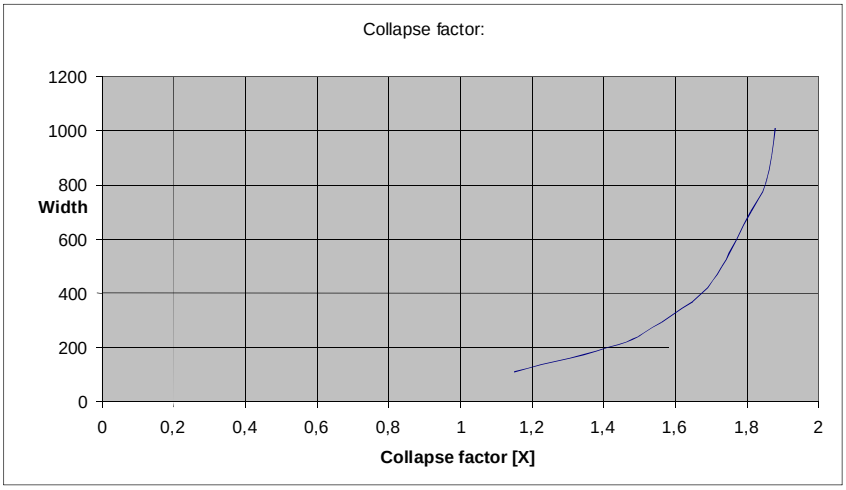

Collapse factor = $\frac{\text{min. inner radius}}{\text{belt width}}$

Min. inner radius = collapse factor x belt width.

S.100R

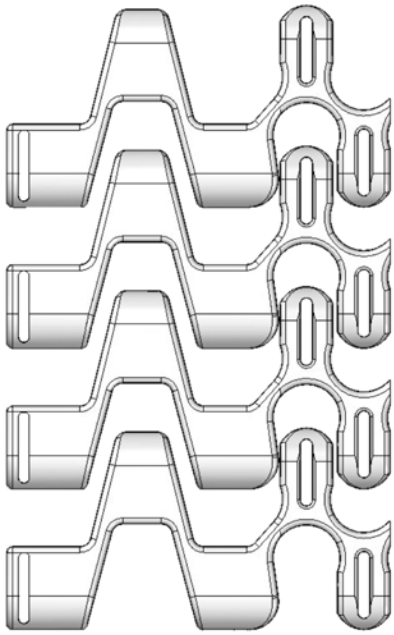

Belt Data.			
Belt material	Rods	Max. belt pull Lb	Belt weight lb/square foot
Polyacetal (POM)	PP Nylon Steel	165 240 330	1.43 1.43 2.46
Polypropylene (PP)	PP Nylon Steel	130 200 220	.92 .92 2.05

Belt surface:	Smooth.
Open area:	52 %
Strength:	The ideal choice for medium weight.
Material/colour:	POM, PP
Cleanability:	Good
Accessories:	25 (.98), 50 (1.97) and 75 mm (2.95) flights, 25 mm (.98) side guards, Friction top, hooks and steel reinforcements.
Application:	Spiral coolers, radius conveyors.
Construction:	Side modules, centre modules.
Width interval:	Normally 20 mm (.79). E.g 209 (8.23), 229 mm (9.02)
Inner radius:	Collapse factor from 1,5
Food approved	

Sprocket Data								
No. of teeth	A= Outside diameter	B= Pitch-diameter	C= Inside-diameter	Hub width:	Round bore		Square bore	
					mm	in.	mm	in.
8	78 (3.07)	66 (2.60)	54 (2.13)	20 (.79)	20/25	1	25	
12	108 (4.25)	96 (3.78)	84 (3.31)	20 (.79)	20/25/30/40	¾/1/1¼	25/40	1½
20	173 (6.81)	161 (6.34)	149 (5.87)	35 (1.38)	25/30/40	1/1¼	25/40	1½

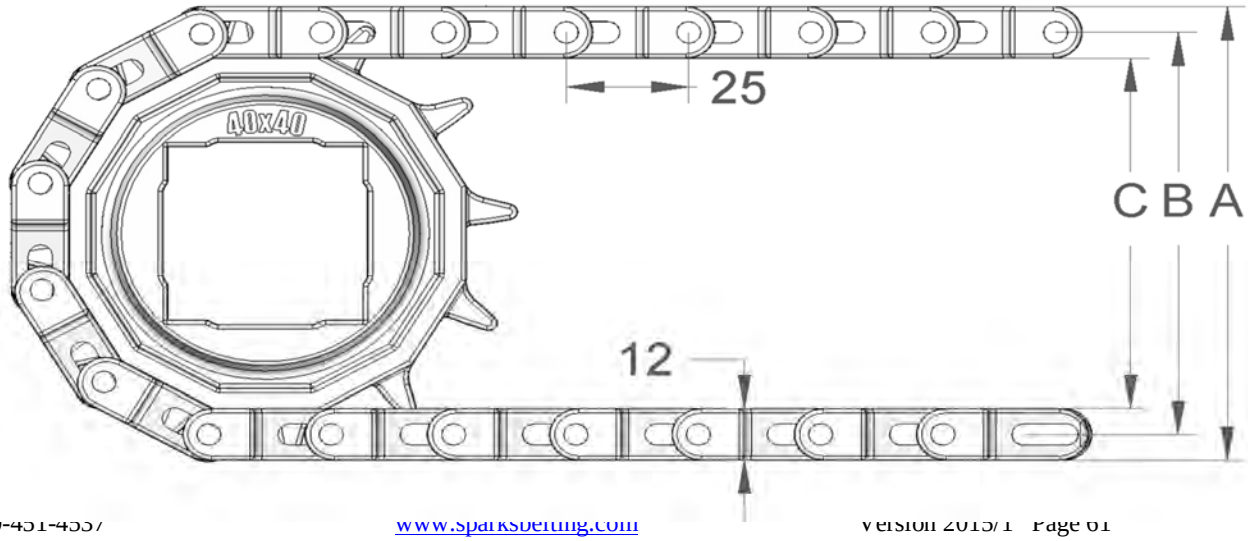

S.100R - 25 mm. Radius belt dimensions.

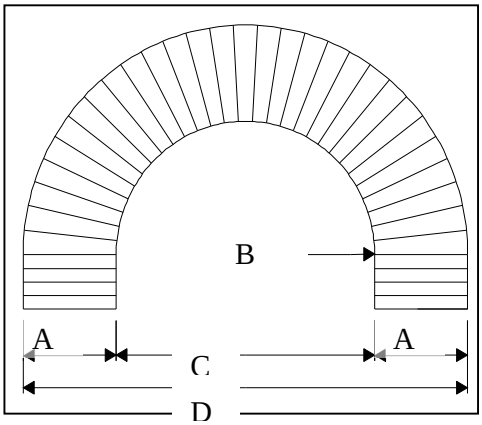

A = Standard belt width
B = Inner radius
C = Inner diameter
D = Outer diameter

S-100R

A	**8.23**	**10.63**	**14.69**	**18.70**	**22.72**	**26.73**	**30.79**	**34.80**	**38.82**	**42.83**
B	13.50	17.76	25.39	33.27	41.77	49.72	57.87	66.81	74.92	84.37
C	27.01	35.51	50.79	66.54	83.54	99.45	115.75	133.62	149.84	168.74
D	43.46	56.77	80.16	103.94	128.98	152.91	177.32	203.23	227.48	254.41

Standard width – Radius belts

S – 100R	**S – 100R**
5.00	29.17
5.79	29.96
6.61	**30.79**
7.40	31.57
8.23	32.40
9.02	33.19
9.84	34.02
10.63	**34.80**
11.46	35.59
12.24	36.42
13.07	37.20
13.86	38.03
14.69	**38.82**
15.47	39.65
16.26	**42.83**
17.05	46.85
17.83	47.64
18.70	**50.94**
19.49	51.73
20.31	
21.10	
21.93	
22.72	
23.54	
24.33	
25.12	
25.94	
26.73	
27.52	
28.35	

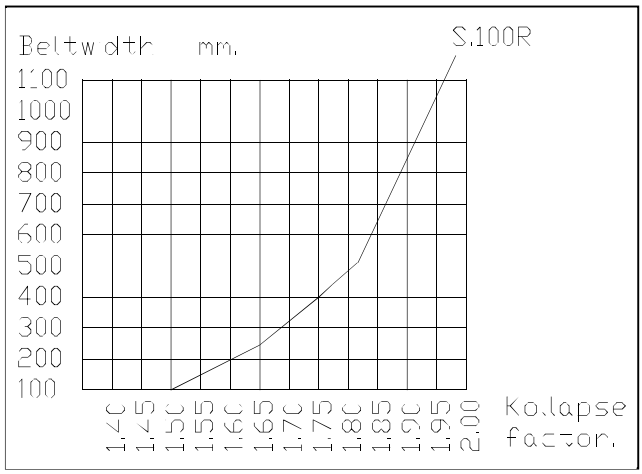

Collapse factor = $\frac{\text{min. inner radius}}{\text{belt width}}$

Min. inner radius = collapse factor x belt width.

Hook measurement for S.100R Turned inside

S.100R – Distance for hooks turned inside – (mm)

Belt width

	38	58	79	99	120	140	161	181	202	221	242	262	282	304	324	345	365	386	406	427	447	467	488	508	528	549	570	590	611	631	652	672	693	714	734	754	775	795	815	836
127																																								
147																																								
168																																								
188																																								
209	38																																							
229	-	58																																						
250	-	-	79																																					
270	-	-	-	99																																				
291	-	-	-	-	120																																			
311	-	-	-	-	-	140																																		
332	-	-	-	-	-	-	161																																	
352	-	-	-	-	-	-	-	181																																
373	-	-	-	-	-	-	-	-	201																															
393	-	-	-	-	-	-	-	-	-	221																														
413	-	-	-	-	-	-	-	-	-	-	242																													
433	-	-	-	-	-	-	-	-	-	-	-	262																												
453	-	-	-	-	-	-	-	-	-	-	-	-	282																											
475	-	-	-	-	-	-	-	-	-	-	-	-	-	304																										
495	-	-	-	-	-	-	-	-	-	-	-	-	-	-	324																									
516	-	-	-	-	-	-	-	-	-	-	-	-	-	-	-	345																								
536	-	-	-	-	-	-	-	-	-	-	-	-	-	-	-	-	365																							
557	-	-	-	-	-	-	-	-	-	-	-	-	-	-	-	-	-	386																						
577	-	-	-	-	-	-	-	-	-	-	-	-	-	-	-	-	-	-	406																					
598	-	-	-	-	-	-	-	-	-	-	-	-	-	-	-	-	-	-	-	427																				
618	-	-	-	-	-	-	-	-	-	-	-	-	-	-	-	-	-	-	-	-	447																			
638	-	-	-	-	-	-	-	-	-	-	-	-	-	-	-	-	-	-	-	-	-	467																		
659	-	-	-	-	-	-	-	-	-	-	-	-	-	-	-	-	-	-	-	-	-	-	488																	
679	-	-	-	-	-	-	-	-	-	-	-	-	-	-	-	-	-	-	-	-	-	-	-	508																
699	-	-	-	-	-	-	-	-	-	-	-	-	-	-	-	-	-	-	-	-	-	-	-	-	528															
720	-	-	-	-	-	-	-	-	-	-	-	-	-	-	-	-	-	-	-	-	-	-	-	-	-	549														
741	-	-	-	-	-	-	-	-	-	-	-	-	-	-	-	-	-	-	-	-	-	-	-	-	-	-	570													
761	-	-	-	-	-	-	-	-	-	-	-	-	-	-	-	-	-	-	-	-	-	-	-	-	-	-	-	590												
782	-	-	-	-	-	-	-	-	-	-	-	-	-	-	-	-	-	-	-	-	-	-	-	-	-	-	-	-	611											
802	-	-	-	-	-	-	-	-	-	-	-	-	-	-	-	-	-	-	-	-	-	-	-	-	-	-	-	-	-	631										
823	-	-	-	-	-	-	-	-	-	-	-	-	-	-	-	-	-	-	-	-	-	-	-	-	-	-	-	-	-	-	652									
843	-	-	-	-	-	-	-	-	-	-	-	-	-	-	-	-	-	-	-	-	-	-	-	-	-	-	-	-	-	-	-	672								
864	-	-	-	-	-	-	-	-	-	-	-	-	-	-	-	-	-	-	-	-	-	-	-	-	-	-	-	-	-	-	-	-	693							
884	-	-	-	-	-	-	-	-	-	-	-	-	-	-	-	-	-	-	-	-	-	-	-	-	-	-	-	-	-	-	-	-	-	714						
904	-	-	-	-	-	-	-	-	-	-	-	-	-	-	-	-	-	-	-	-	-	-	-	-	-	-	-	-	-	-	-	-	-	-	734					
925	-	-	-	-	-	-	-	-	-	-	-	-	-	-	-	-	-	-	-	-	-	-	-	-	-	-	-	-	-	-	-	-	-	-	-	754				
945	-	-	-	-	-	-	-	-	-	-	-	-	-	-	-	-	-	-	-	-	-	-	-	-	-	-	-	-	-	-	-	-	-	-	-	-	775			
966	-	-	-	-	-	-	-	-	-	-	-	-	-	-	-	-	-	-	-	-	-	-	-	-	-	-	-	-	-	-	-	-	-	-	-	-	-	795		
986	-	-	-	-	-	-	-	-	-	-	-	-	-	-	-	-	-	-	-	-	-	-	-	-	-	-	-	-	-	-	-	-	-	-	-	-	-	-	815	
1007	-	-	-	-	-	-	-	-	-	-	-	-	-	-	-	-	-	-	-	-	-	-	-	-	-	-	-	-	-	-	-	-	-	-	-	-	-	-	-	836

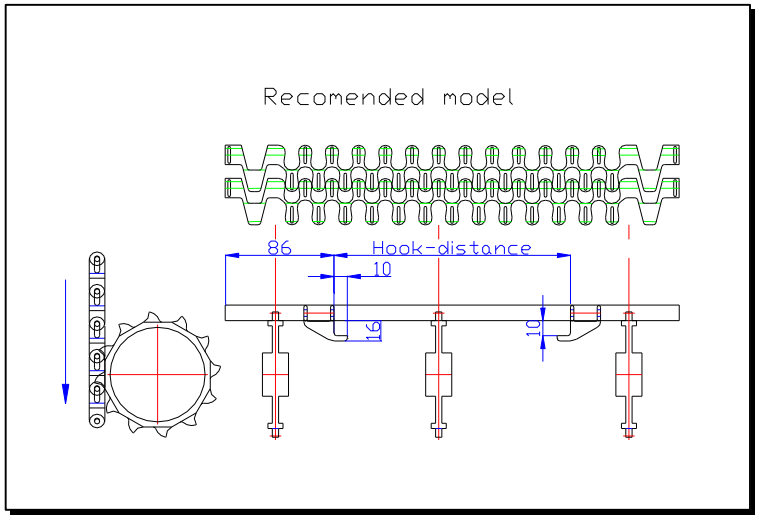

Hook measurement for S.100R Turned outside

S.100R – Distance for hooks turned outside – (mm)

Belt width

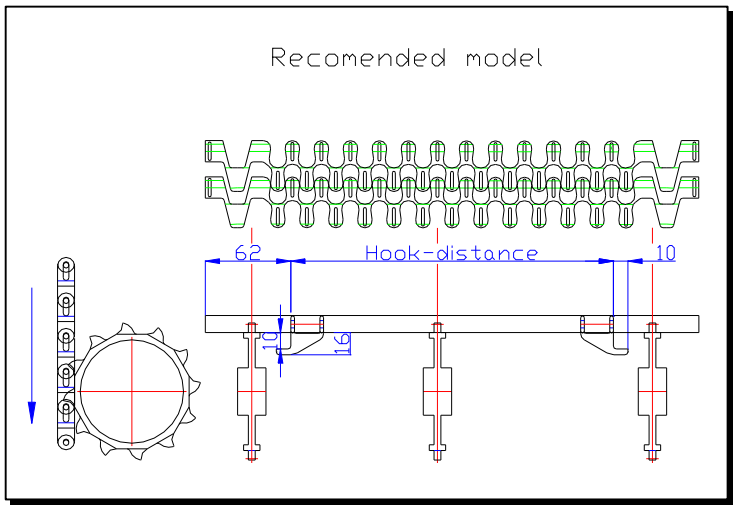

Belt width	64	85	105	126	146	167	187	208	228	249	269	289	310	330	351	371	392	412	433	453	474	494	514	535	555	575	596	617	637	658	678	699	719	740	760	780	801	821	842	862	883
127																																									
147																																									
168																																									
188	64																																								
209	-	85																																							
229	-	-	105																																						
250	-	-	-	126																																					
270	-	-	-	-	146																																				
291	-	-	-	-	-	167																																			
311	-	-	-	-	-	-	187																																		
332	-	-	-	-	-	-	-	208																																	
352	-	-	-	-	-	-	-	-	228																																
373	-	..-	-	-	-	-	-	-	-	249																															
393	-	-	-	-	-	-	-	-	-	-	269																														
413	-	-	-	-	-	-	-	-	-	-	-	289																													
434	-	-	-	-	-	-	-	-	-	-	-	-	310																												
454	-	-	-	-	-	-	-	-	-	-	-	-	-	330																											
475	-	-	-	-	-	-	-	-	-	-	-	-	-	-	351																										
495	-	-	-	-	-	-	-	-	-	-	-	-	-	-	-	371																									
516	-	-	-	-	-	-	-	-	-	-	-	-	-	-	-	-	392																								
536	-	-	-	-	-	-	-	-	-	-	-	-	-	-	-	-	-	412																							
557	-	-	-	-	-	-	-	-	-	-	-	-	-	-	-	-	-	-	433																						
577	-	-	-	-	-	-	-	-	-	-	-	-	-	-	-	-	-	-	-	453																					
598	-	-	-	-	-	-	-	-	-	-	-	-	-	-	-	-	-	-	-	-	474																				
618	-	-	-	-	-	-	-	-	-	-	-	-	-	-	-	-	-	-	-	-	-	494																			
638	-	-	-	-	-	-	-	-	-	-	-	-	-	-	-	-	-	-	-	-	-	-	514																		
659	-	-	-	-	-	-	-	-	-	-	-	-	-	-	-	-	-	-	-	-	-	-	-	535																	
679	-	-	-	-	-	-	-	-	-	-	-	-	-	-	-	-	-	-	-	-	-	-	-	-	555																
699	-	-	-	-	-	-	-	-	-	-	-	-	-	-	-	-	-	-	-	-	-	-	-	-	-	575															
720	-	-	-	-	-	-	-	-	-	-	-	-	-	-	-	-	-	-	-	-	-	-	-	-	-	-	596														
741	-	-	-	-	-	-	-	-	-	-	-	-	-	-	-	-	-	-	-	-	-	-	-	-	-	-	-	617													
761	-	-	-	-	-	-	-	-	-	-	-	-	-	-	-	-	-	-	-	-	-	-	-	-	-	-	-	-	637												
782	-	-	-	-	-	-	-	-	-	-	-	-	-	-	-	-	-	-	-	-	-	-	-	-	-	-	-	-	-	658											
802	-	-	-	-	-	-	-	-	-	-	-	-	-	-	-	-	-	-	-	-	-	-	-	-	-	-	-	-	-	-	678										
823	-	-	-	-	-	-	-	-	-	-	-	-	-	-	-	-	-	-	-	-	-	-	-	-	-	-	-	-	-	-	-	699									
843	-	-	-	-	-	-	-	-	-	-	-	-	-	-	-	-	-	-	-	-	-	-	-	-	-	-	-	-	-	-	-	-	719								
864	-	-	-	-	-	-	-	-	-	-	-	-	-	-	-	-	-	-	-	-	-	-	-	-	-	-	-	-	-	-	-	-	-	740							
884	-	-	-	-	-	-	-	-	-	-	-	-	-	-	-	-	-	-	-	-	-	-	-	-	-	-	-	-	-	-	-	-	-	-	760						
904	-	-	-	-	-	-	-	-	-	-	-	-	-	-	-	-	-	-	-	-	-	-	-	-	-	-	-	-	-	-	-	-	-	-	-	780					
925	-	-	-	-	-	-	-	-	-	-	-	-	-	-	-	-	-	-	-	-	-	-	-	-	-	-	-	-	-	-	-	-	-	-	-	-	801				
945	-	-	-	-	-	-	-	-	-	-	-	-	-	-	-	-	-	-	-	-	-	-	-	-	-	-	-	-	-	-	-	-	-	-	-	-	-	821			
966	-	-	-	-	-	-	-	-	-	-	-	-	-	-	-	-	-	-	-	-	-	-	-	-	-	-	-	-	-	-	-	-	-	-	-	-	-	-	842		
986	-	-	-	-	-	-	-	-	-	-	-	-	-	-	-	-	-	-	-	-	-	-	-	-	-	-	-	-	-	-	-	-	-	-	-	-	-	-	-	862	
1007	-	-	-	-	-	-	-	-	-	-	-	-	-	-	-	-	-	-	-	-	-	-	-	-	-	-	-	-	-	-	-	-	-	-	-	-	-	-	-	-	883

7. S.50 Radius Belt

Pitch 50 mm (1.97”)

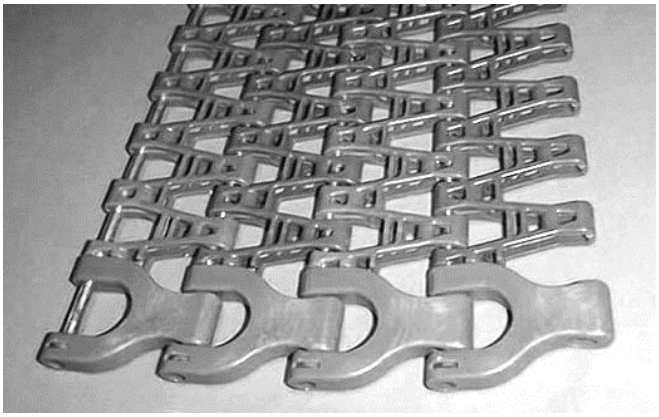

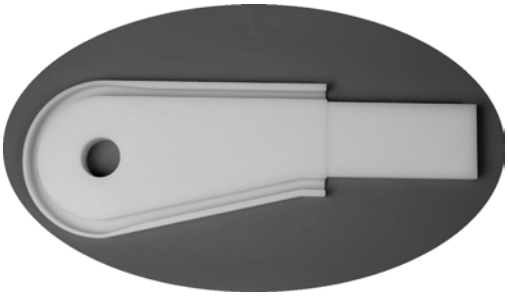

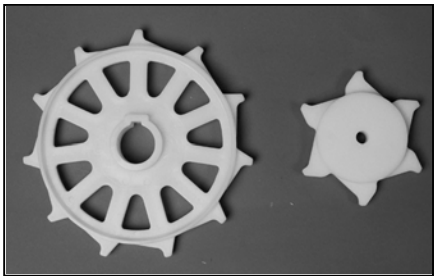

S.201

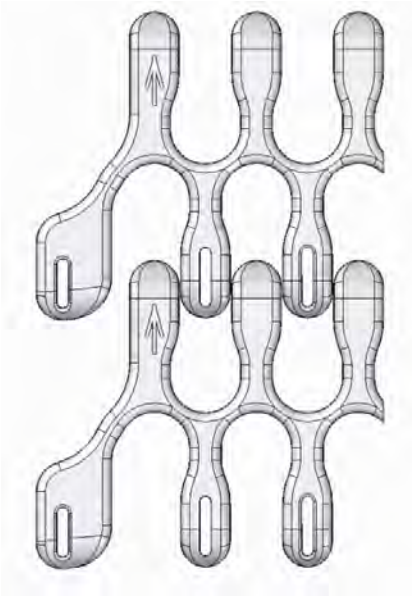

Belt Data			
Belt material	Rods	Max. belt pull (lbs).	Belt weight lb/square foot
Polyacetal (POM)	PP Nylon	450 675	1.64 1.64
Polypropylene (PP)	PP Nylon	Please contact Sparks Belting	

Belt surface:	Smooth.
Open area:	47 %
Strength:	Ideal for heavy duty spirals and curves.
Material/colour:	POM, PP
Cleanability:	Good
Application:	Spiral coolers, radius conveyors.
Contruction:	Side modules, centre modules.
Width interval:	Normally 20mm.(.79") e.g: 210mm (8.27), 230mm etc.
Inner radius:	Please see next page.
Food approved	

Sprocket Data								
No. of teeth	A= Outside diameter	B= Pitch-diameter	C= Inside-diameter	Hub width:	Round bore		Square bore	
					mm	in.	mm	in.
10	169(6.65)	154(6.06)	139(5.47)	35(1.38)	25/30/40/50/60	1/1¼	25/40/60	1½/2½

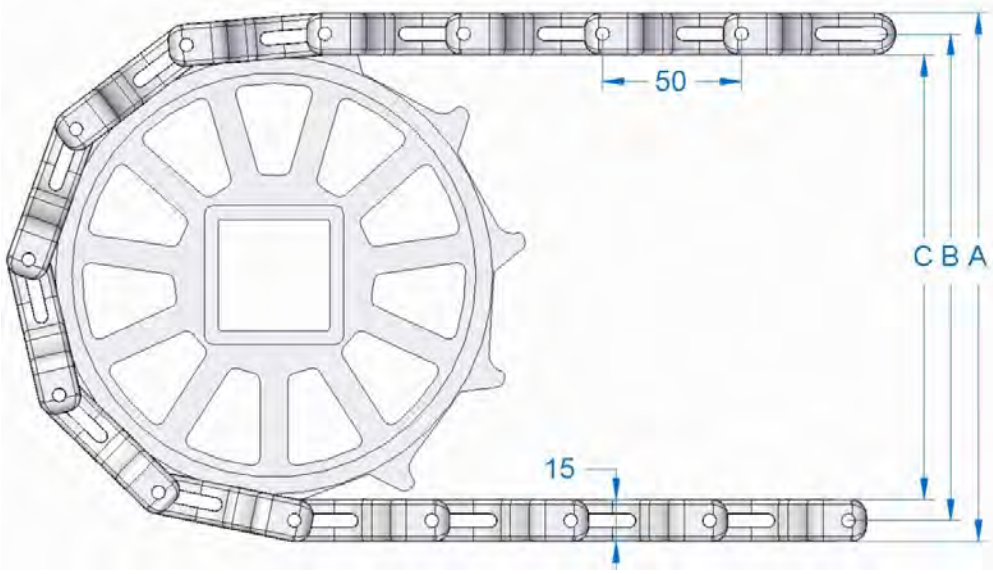

S.201 Hook

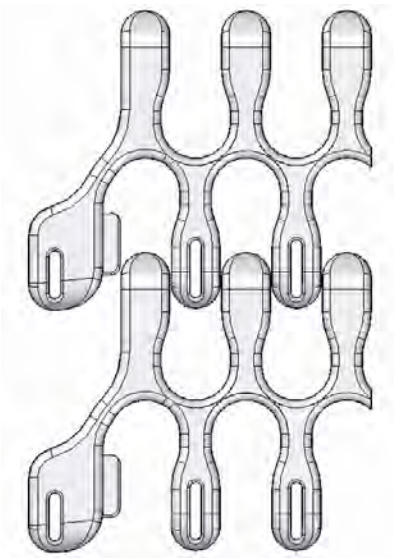

Belt Data			
Belt material	Rods	Max. belt pull (lb).	Belt weight lb/square foot
Polyacetal (POM)	PP Nylon	450 675	1.64 1.64
Polypropylene (PP)	PP Nylon	Please contact Sparks Belting	

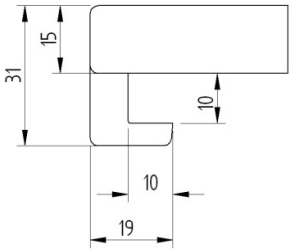

Belt surface: Smooth.
Open area: 47 %
Strength: Ideal for heavy duty spirals and curves.
Material/colour: POM, PP
Cleanability: Good
Application: Spiral coolers, radius conveyors.
Contruction: Side modules, centre modules.
Width interval: Normally 20mm(.79”). e.g: 210mm (8.27”), 230 mm etc.
Inner radius: Please see next page.
Hooks: Turned inside
Distance between Hooks: Belt width minus 17mm (.67”).
Food approved

Sprocket Data								
No. of teeth	A= Outside diameter	B= Pitch-diameter	C= Inside-diameter	Hub width:	Round bore		Square bore	
					mm	in.	mm	in.
10	169(6.65)	154(6.06)	139(5.47)	35(1.38)	25/30/40/50/60	1/1¼	25/40/60	1½/2½

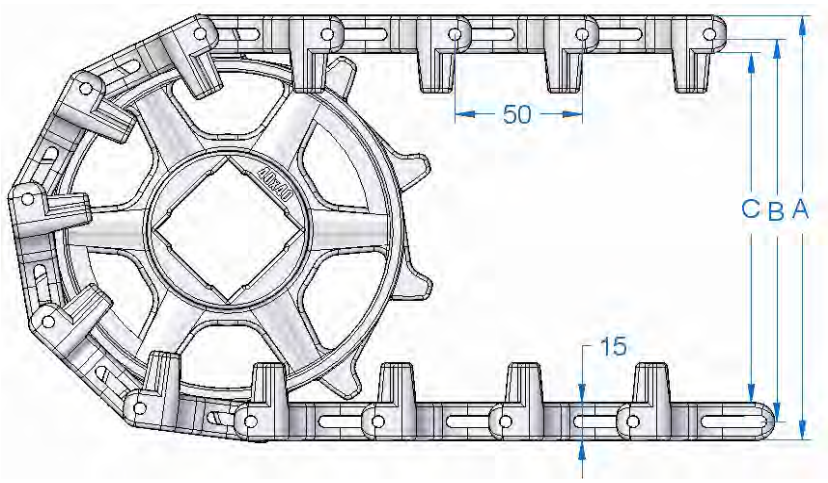

S.201 - 50 mm (1.97) Radius belt dimensions.

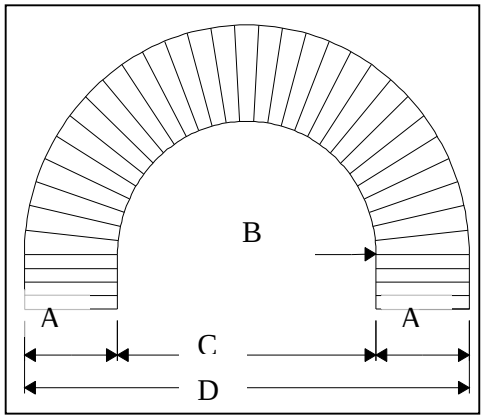

A = Standard belt width
B = Inner radius
C = Inner diameter
D = Outer diameter

A	**4.21**	**8.27**	**11.50**	**15.51**	**19.57**	**23.62**	**27.64**	**31.69**	**35.71**	**39.80**
B	5.83	9.45	13.98	19.88	26.38	33.66	40.94	47.64	53.54	60.63
C	11.65	18.90	27.95	39.76	52.76	67.32	81.89	95.28	107.09	121.26
D	20.08	35.43	50.94	70.79	91.89	114.57	137.17	158.66	178.50	200.87

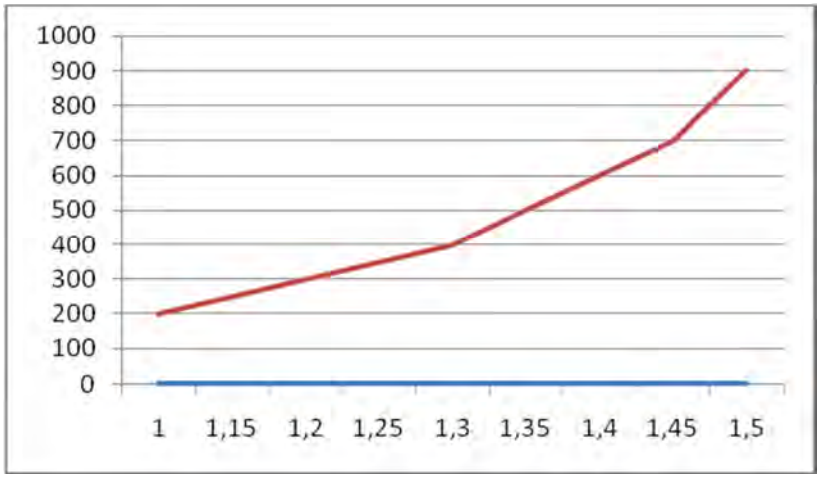

Standard width – Radius belts			
Belt width.	**Min.inner radius.**	**Belt width.**	**Min inner radius**
4.21	5.83	**23.62**	33.66
5.04	6.10	**24.41**	35.04
5.83	6.30	**25.24**	36.42
6.65	7.09	**26.06**	37.80
7.44	8.07	**26.85**	39.37
8.27	9.25	**27.64**	40.94
9.06	10.43	**28.46**	42.72
9.88	11.61	**29.29**	44.09
10.67	12.80	**30.08**	45.28
11.50	13.98	**30.91**	46.46
12.28	15.16	**31.69**	47.64
13.11	16.34	**32.52**	48.82
13.90	17.52	**33.31**	50.00
14.72	18.70	**34.13**	51.22
15.51	19.88	**34.92**	52.40
16.30	21.06	**35.71**	53.54
17.13	22.24	**36.54**	55.12
17.91	23.43	**37.36**	56.50
18.78	25.00	**38.19**	58.07
19.57	26.38	**38.98**	59.25
20.39	27.76	**39.80**	60.63
21.18	29.13		
22.01	30.91		
22.80	32.28		

S.250

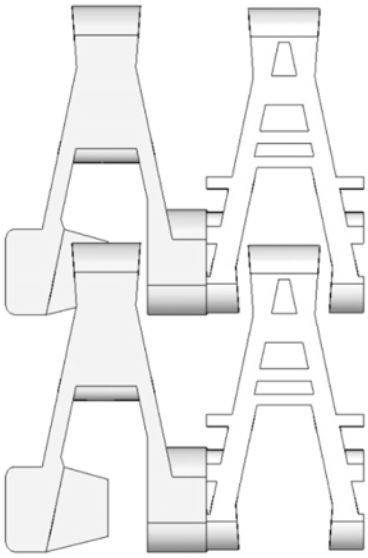

Belt Data		
Materials	Max. belt pull Lb	Belt weight lb/square foot
Polyacetal (POM)	550	1.84
Polypropylene (PP)	310	1.54

Belt surface:	Smooth.
Open area:	67 %
Strength:	The right belt for heavy transportation.
Material/colour:	POM, PP
Cleanability:	Good
Accessories:	3 mm (.12) flight buds made in friction material or POM/PP. 25 mm (.98) side guards. Steel reinforcements.
Application:	Spiral coolers, radius conveyors.
Construction:	43 mm (1.69) side modules, 200 mm (7.87) centre modules.
Width interval:	Normally 33 mm (1.30). E.g: 119 (4.69), 152 mm (5.98) Contact Sparks Belting for special widths
Food approved	

Sprocket Data								
No. of teeth	A= Outside diameter	B= Pitch-diameter	C= Inside-diameter	Hub width:	Round bore		Square bore	
					mm	in.	mm	in.
11	189 (7.44)	177 (6.97)	166 (6.54)	22 (.87)	30/40/45		40	
11 STEEL	189 (7.44)	177 (6.97)	166 (6.54)	22 (.87)	FLEX			

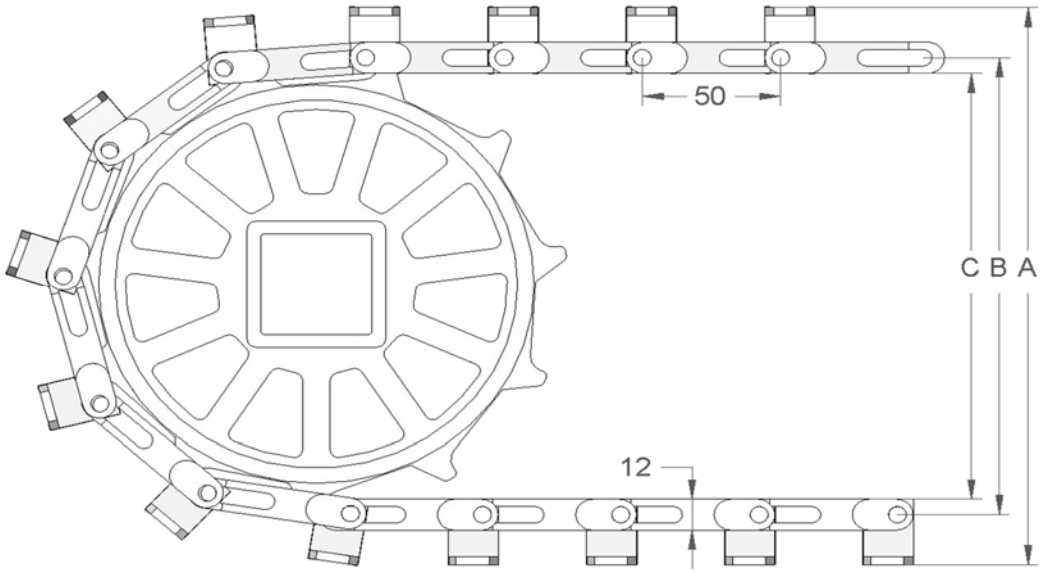

J.450

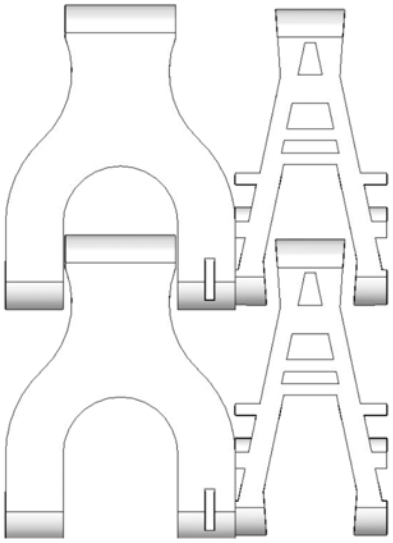

Belt Data		
Material	Max. belt pull Lb	Belt weight lb/square foot
Polyacetal (POM) Polypropylene (PP)	990 440	1.84 1.54

Belt surface:	Smooth.
Open area:	67 %
Strength:	The right belt for heavy transportation.
Material/colour:	POM
Cleanability:	Good.
Accessories:	3 mm (.12) flight buds made in friction material or POM. 5 (.20) and 25 mm (.98) side guards.
Application:	Spiral coolers, radius conveyors. It only runs in J-curves.
Construction:	47/50 mm (1.85/1.97) side modules, 200 mm (7.87) centre modules.
Width interval:	Normally 33 mm (1.30). E.g: 95 (3.74), 128 (5.04) Contact Sparks Belting for special widths
Food approved	

Sprocket Data								
No. of teeth	A= Outside diameter	B= Pitch-diameter	C= Inside-diameter	Hub width:	Round bore		Square bore	
					mm	in.	mm	in.
6	116 (4.57)	104 (4.09)	92 (3.62)	22 (.87)	FLEX			
11	189 (7.44)	177 (6.97)	166 (6.54)	22 (.87)	30/40/45		40	
11 STEEL	189 (7.44)	177 (6.97)	166 (6.54)	22 (.87)	FLEX			

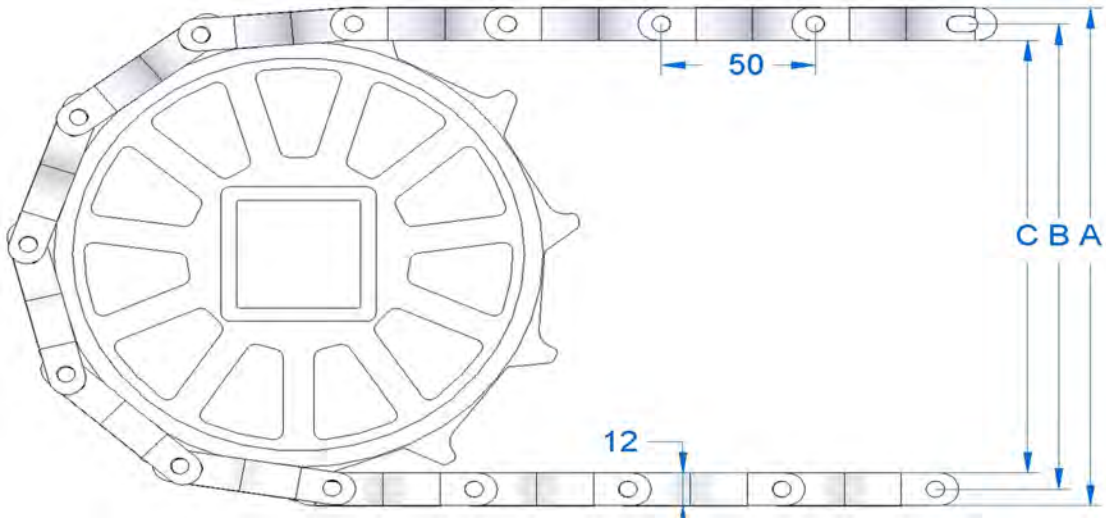

S.250 / J.450 50 mm (1.97). Radius belt dimensions.

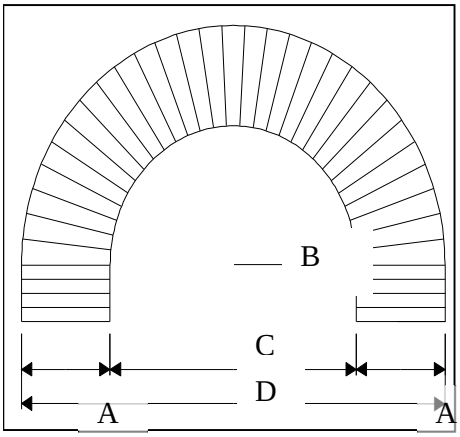

S-250										
A	**7.32**	**11.34**	**15.28**	**19.29**	**23.23**	**27.36**	**31.30**	**35.24**	**39.17**	**43.11**
B	10.51	16.89	23.39	30.28	37.40	45.28	52.99	61.06	69.49	78.27
C	21.02	33.78	46.77	60.55	74.80	90.55	105.98	122.13	138.98	156.54
D	35.67	56.46	77.32	99.13	121.26	145.28	168.58	192.60	217.32	242.76
J-450										
A	**3.74**	**7.68**	**11.65**	**15.59**	**19.61**	**23.62**	**27.60**	**31.57**	**35.55**	**39.49**
B	5.24	11.14	17.48	24.17	31.38	37.80	45.55	53.70	61.50	69.88
C	10.47	22.28	34.96	48.35	62.76	75.59	91.10	107.40	122.99	139.76
D	17.95	37.64	58.27	79.53	101.97	122.83	146.30	170.55	194.09	218.74

A = Standard belt width
B = Inner radius
C = Inner diameter
D = Outer diameter

Standard width – Radius belt	
S-250	**J-450**
-	**3.74**
4.69	5.04
5.98	6.38
7.32	**7.68**
8.62	9.02
9.92	10.31
11.34	**11.65**
12.64	12.95
13.94	14.25
15.28	**15.59**
16.57	16.89
17.87	18.19
19.29	**19.61**
20.59	20.94
21.89	22.28
23.23	**23.62**
25.83	24.92
27.36	26.26
28.66	**27.60**
29.96	28.90
31.30	30.24
32.60	**31.57**
33.90	32.87
35.24	34.21
39.17	**35.55**
43.11	**39.49**
47.05	**43.43**
50.98	**47.36**
54.92	**51.30**
	55.24

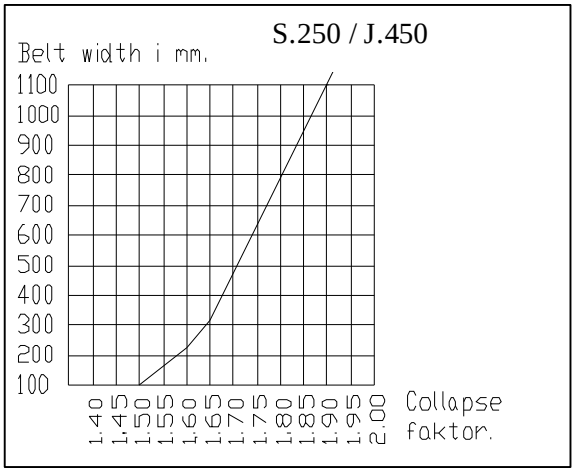

Collapse factor = $\frac{\text{min. inner radius}}{\text{belt width}}$

Min. inner radius = collapse factor x belt width

Note: Belts width steel reinforcements
S.250: + 5 mm (.197“)

Frame measurements for Radius belt

Frame measurements for Radius belt S-250

Measurements in mm.
A = belt width G = A – 24 mm (.94”) H = A – 28 mm (1.10”)

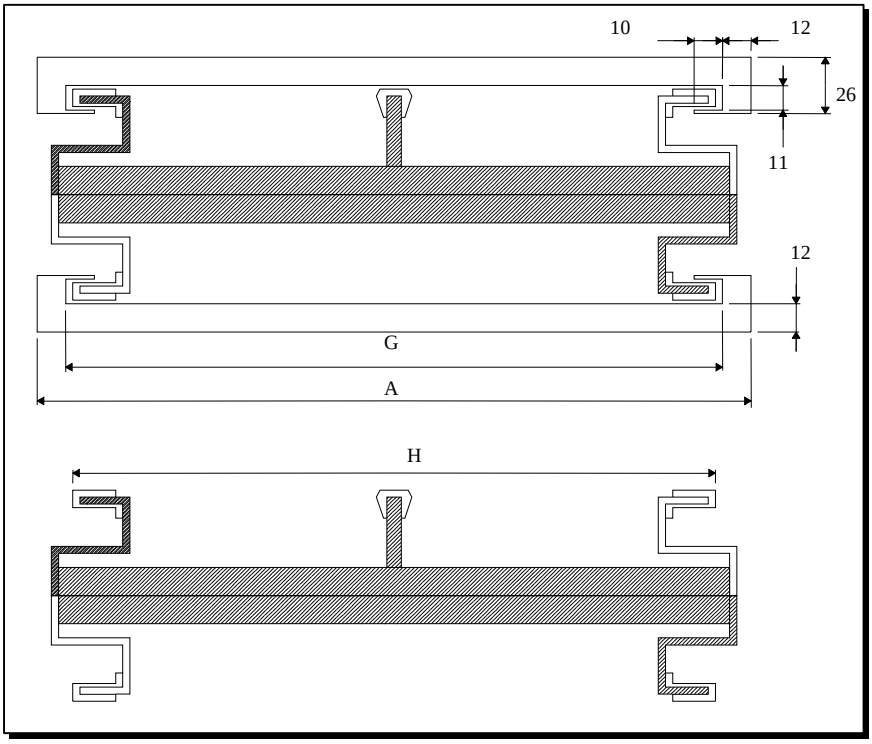

Frame measurements for Radius belt S-100 / J-450

Measurements in mm.
A = belt width B = A + 4 mm (.16”)

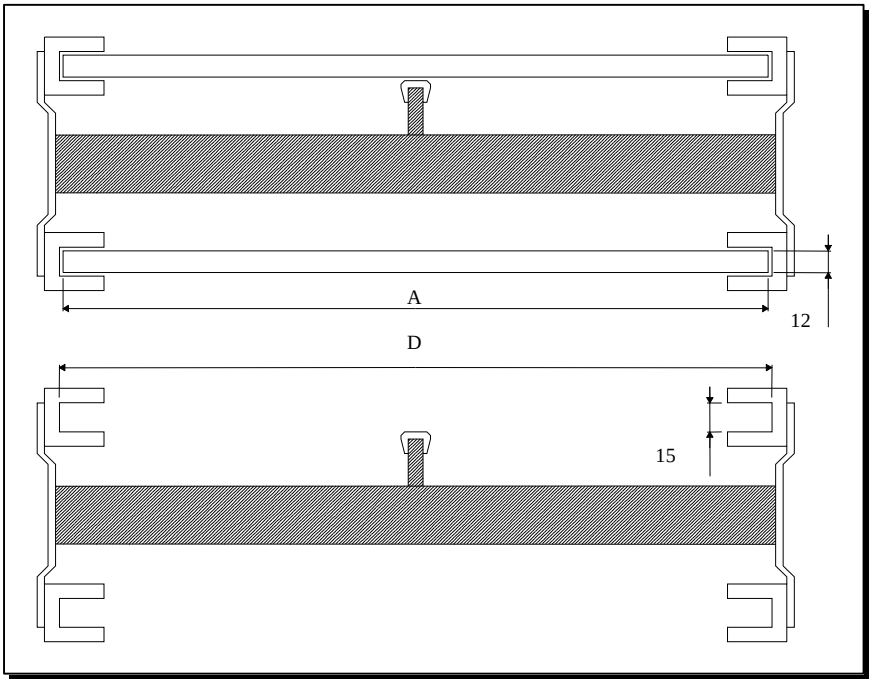

Installation instructions
Radius belts

1. Frame construction.

The frame must be sufficiently stiff to prevent twisting or other forms of dimensional change while loaded.
The outer dimensions must remain within stated tolerances, so that the belt cannot become trapped or fall out of the slide rails.

2. Slide rails.

There should be as few joints as possible and they should always be avoided in the curves. All joints must be smooth, so that the belt cannot get caught in a joint.

3. Sprockets.

The sprocket in the outer curve should be fitted as close to the outer edge as possible. All drive sprockets should be locked so that they cannot move sideways.
Contrary to the drive sprockets, the non-driven sprockets should be fitted, so that they run freely on the shaft.

4. Turning shoe.

It is vital that the transition between the turning shoe and the slide rails is smooth with no risk of the belt getting caught.

5. Tightening.

The belt should normally be installed with an excess length of approx. 3 elements, depending on the total length of the belt.
In the event of the return belt rising immediately after the drive unit, a take-up roller may be necessary. On short belts, tightening to a single element's excess length may be sufficient.
An "accumulation" of the belt must never occur at the drive sprockets.

6. Extra drive unit.

On heavily loaded belts, an extra drive unit may be necessary. This motor can be of the type "BAUER DREHFELDMOTOR" in order to prevent the two motors from working against each other. The extra motor should be placed at the non-driven end, but under special circumstances may be placed at the centre of the belt.

Calculation for a S-curve

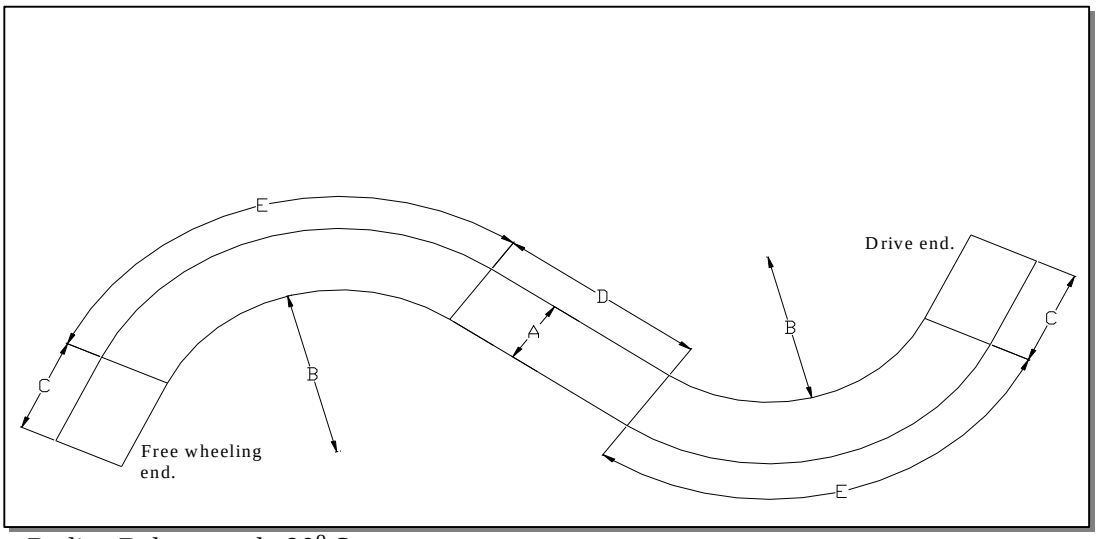

Radius Belt example 90° S-curve.

A: Belt width.
B: Min. inner radius = belt width x collapse factor.
C: Straight run on pull and return = belt width.
D: Straight run between 2 curves = min. 2 x belt width.
E: Curve length.

Calculation example

Belt width 16.57” – 2 pcs. 90° turning radius.
Collapse factor = 1.6

B = 16.57 (A) x 1.6	=	26.512”
C min.	=	16.57”
D min.	=	33.14”
E $\frac{[(B + A) \times 3.14]}{4}$	=	33.82”

Belt length-[C/C] (2 x C)+D+(2 x E) = 134”

Total belt length-(C/C x 2) + sprocket pitch diameter.

8. Accessories

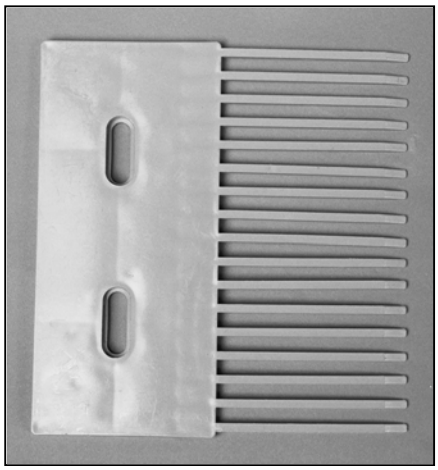

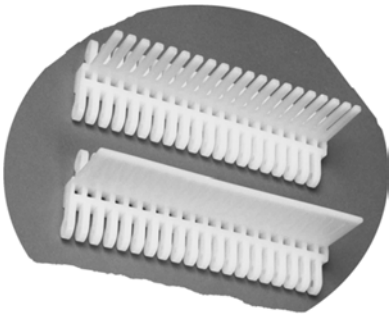

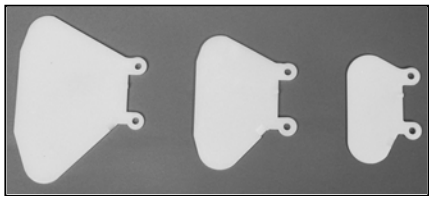

Accessories S.25-100-600-700

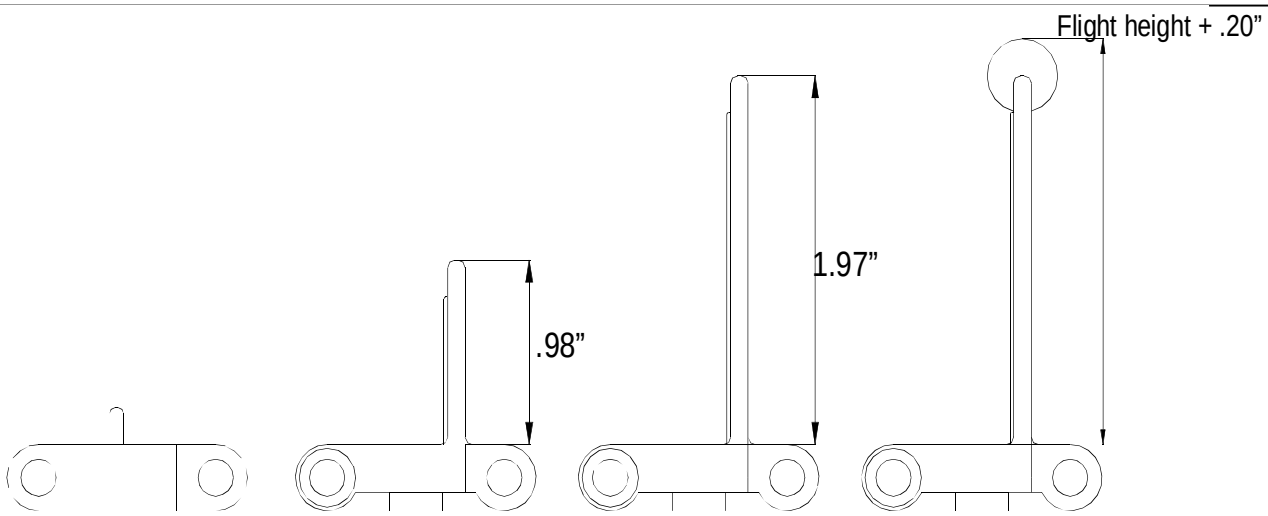

5mm. flight. Standard heights on flights. Flight with round top.

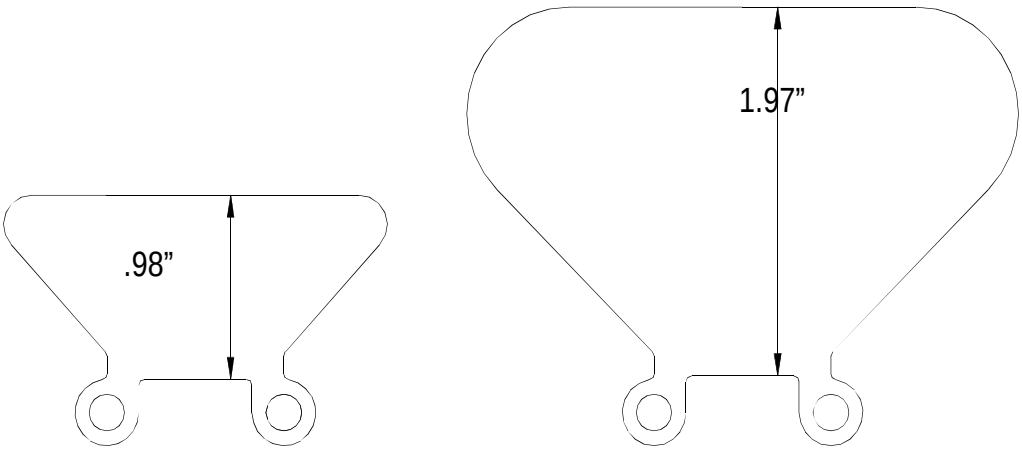

Standard heights on side guards.

Accessories S.25-400-408-800

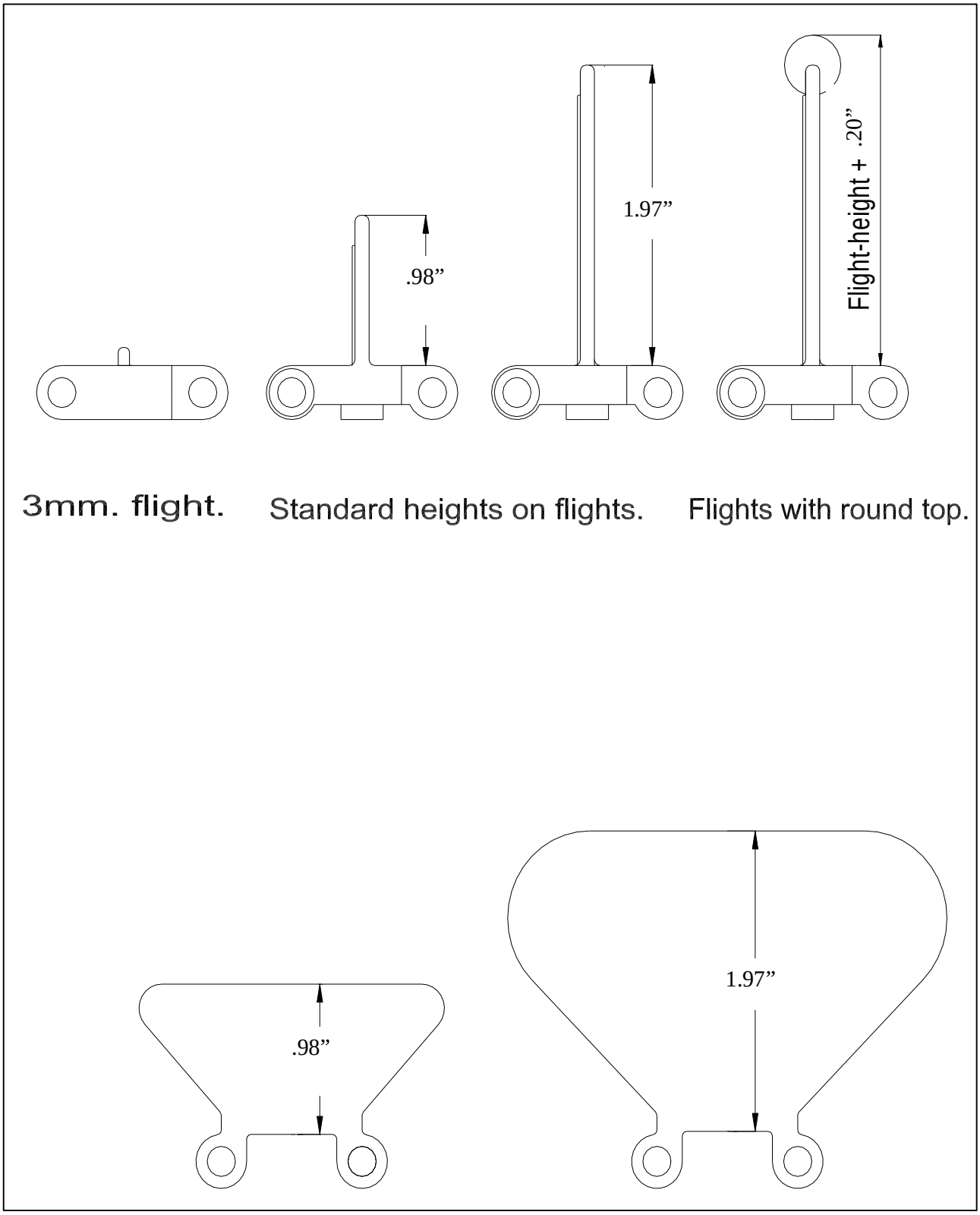

Accessories S.50

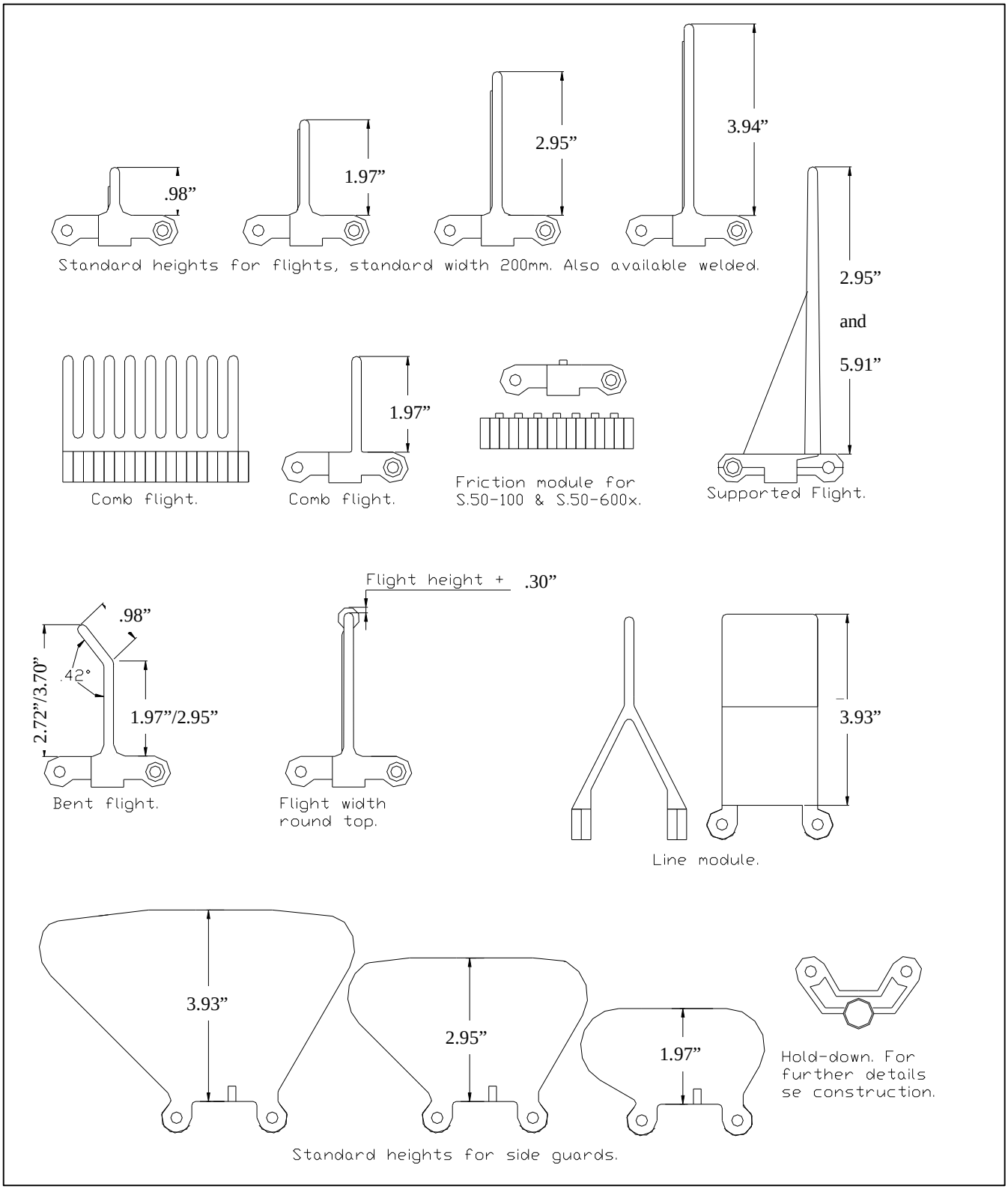

Accessories radius belt S.25

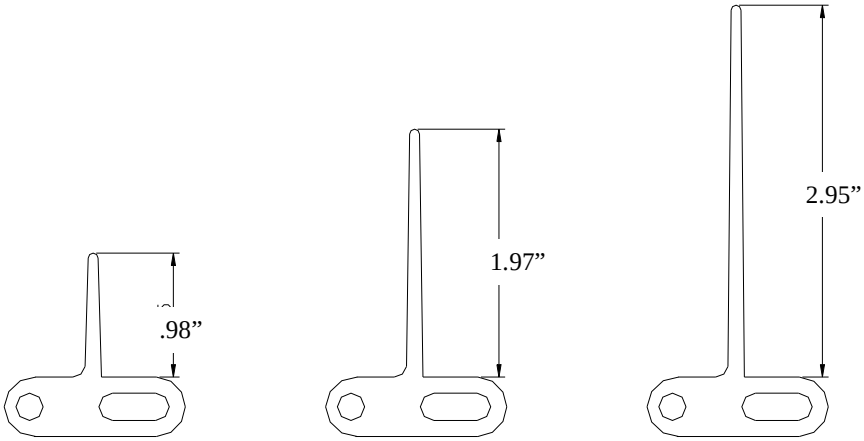

Standard hights onflights

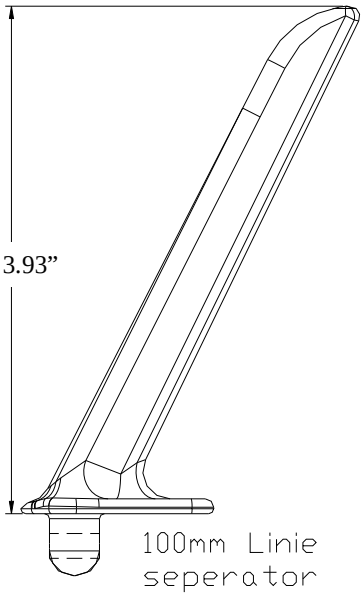

100mm Linie seperator

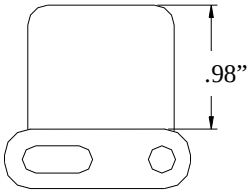

Standard hights on side guard

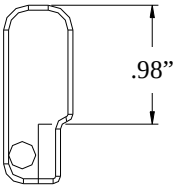

25mm Linie seperator

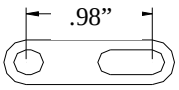

Steel reinforcement

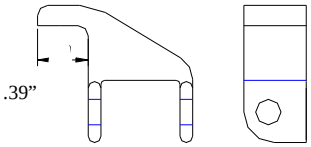

Holddown

Accessories radius belt S.50

3 mm flight made in friction material or POM/PP/friction.

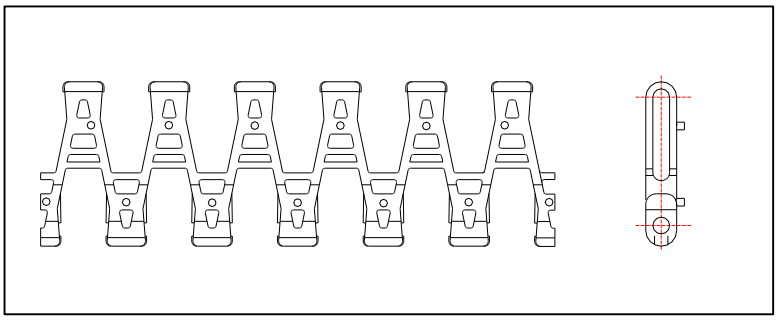

.20” side guard J-450

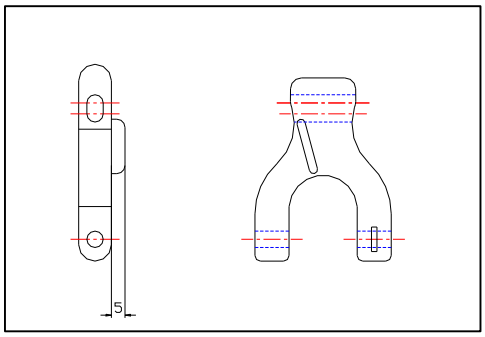

.98” side guard J-450

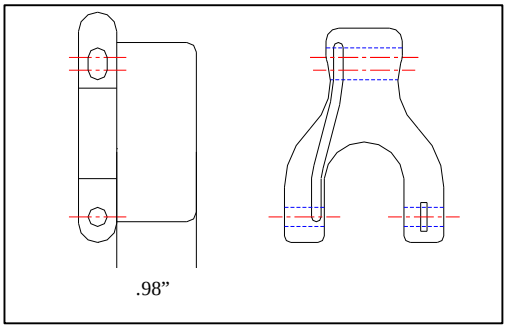

Steel reinforcement S-250

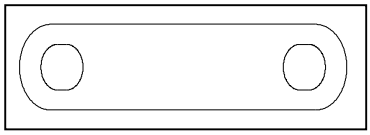

.98” side guard S-250

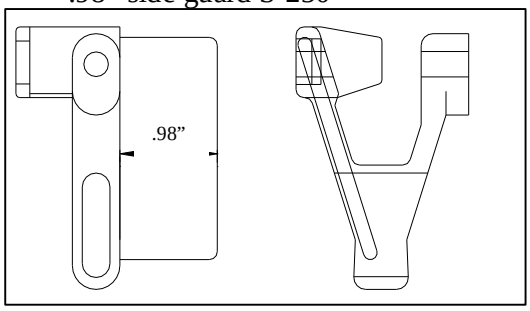

Spare parts for radius belts

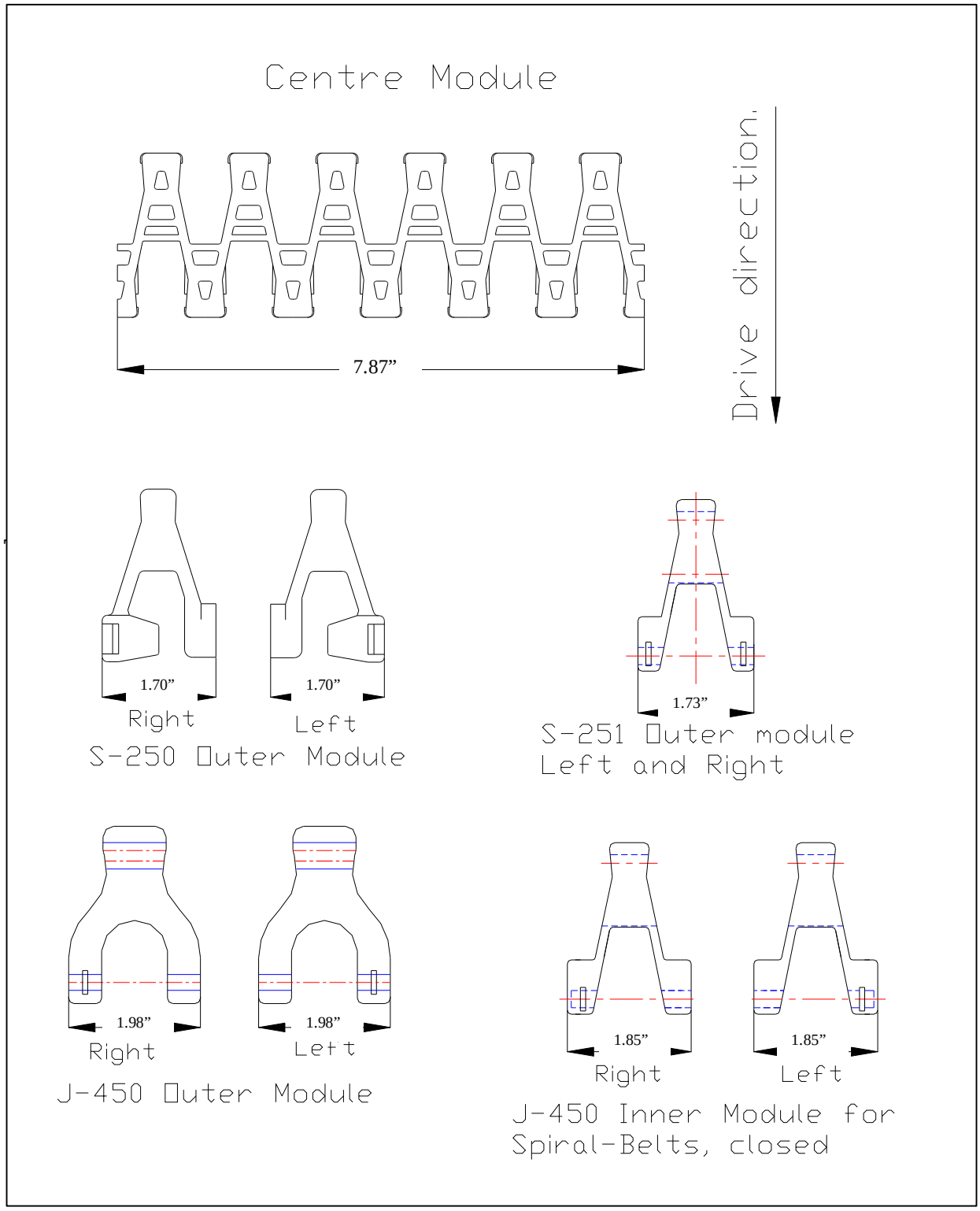

Finger transfer plates

Dimensions in mm.			
	S. 25-200	S. 25-420	S. 50
A	86 (3.39)	75 (2.95)	98 (3.86)
B	32 (1.26)	18 (.71)	50 (1.97)
C	10 (.39)	5 (.20)	10 (.39)
D	57 (2.24)	25 (.98)	57 (2.24)
E	87 (3.43)	52 (2.05)	87 (3.43)
F	31 (1.22)		31 (1.22)
G	9,5 (.37)	9,5 (.37)	9,5 (.37)
H	200 (7.87)	102 (4.02)	200 (7.87)
I	188 (7.40)	92 (3.62)	280 (11.02)

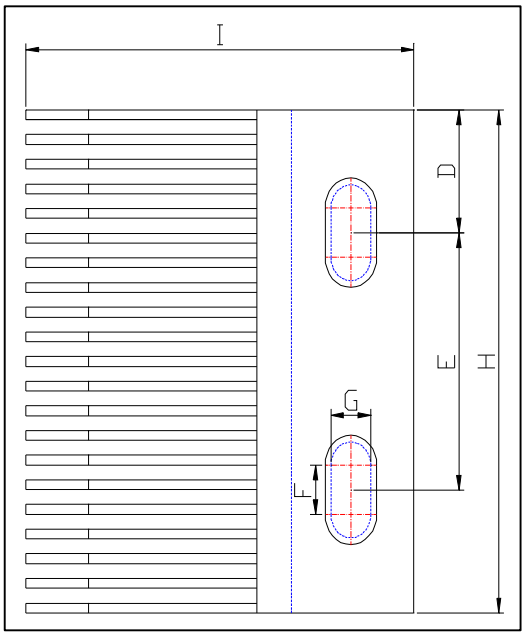

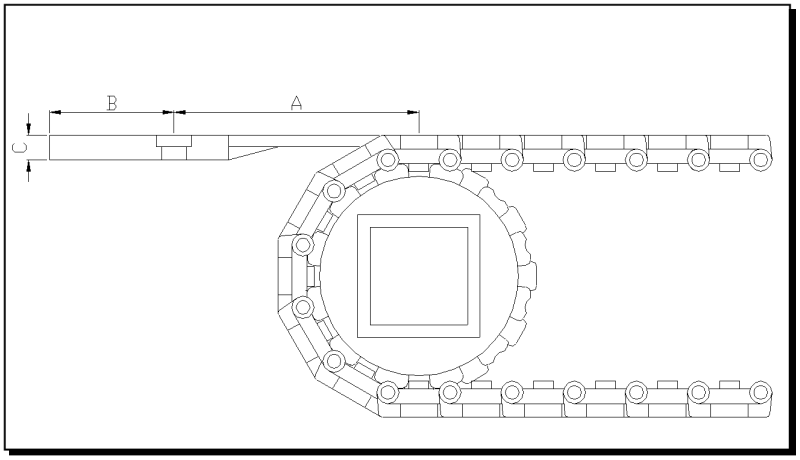

Accessories. Clips – straight belt

<u>underlined + highlighted</u>= Belt will as standard be closed with clips

S.12

Accessories S.12.S.12-400/**<u>406/408</u>** -12400LNY4
Rod length = belt width -58 mm
Except PP belts over 499 mm wide -64 mm

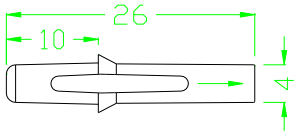

S.25

S.25-**<u>100/200</u>**/400/400F/402/**<u>406/408</u>**/411/**<u>412/420/600/700/702</u>** - 25100LNY4
Rod length = belt width -44 mm
Except PP belts over 499 mm wide -50 mm

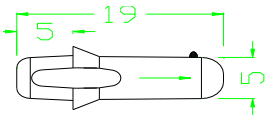

S.25-**<u>800/806/830/836</u>** -25800LNY4
Rod length = belt width -52 mm
Except PP belts over 499 mm wide -58 mm

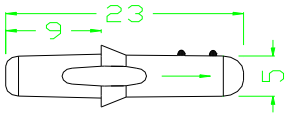

S.50

S.50-100/200/300/600/601/602/606/608/610/630 - 50100LNY4
Rod length = belt width -48 mm
Except PP belts over 499 mm wide -54 mm

Marked by two dots

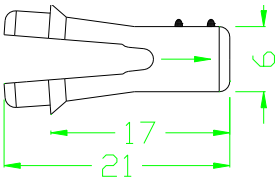

S.50-**<u>401</u>** - 50401LNY4
Rod length = belt width -58 mm
Except PP belts over 499 mm wide -64 mm

Marked by one dot

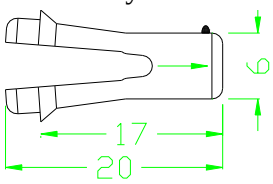

S.50-**<u>801/806/808/830</u>** - 50808LNY4
Rod length = belt width -58 mm
Except PP belts over 499 mm wide -64 mm

Marked by three dots

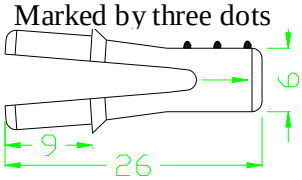

S.50-**<u>906/908/930/938</u>** - 50900LNY4
Rod length = belt width -56 mm
Except PP belts over 499 mm wide -62 mm

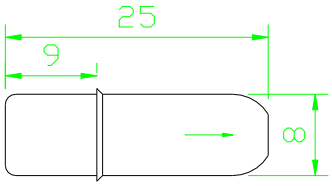

Accessories. Clips – straight belt

<u>underlined + highlighted</u>= Belt will as standard be closed with clips

S.50

S.50-**<u>988</u>** - 50988LNY4 Long lock for 80 mm module

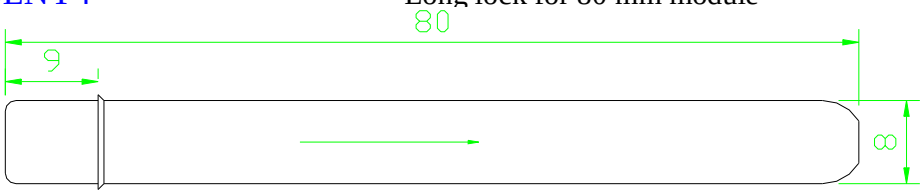

Accessories. Clips – Radius belt

<u>underlined + highlighted</u>= Belt will as standard be closed with clips

S.25 Radius belt <u>S.100R -</u> 2L000M0 Great end lock

Rod length = belt width -14 mm

<u>S.100C</u> Rod length = belt width -12 mm

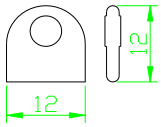

<u>S.101 -</u> 2L001M0 Small end lock

Rod length = belt width 12 mm

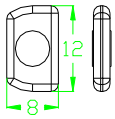

S.50 Radius belt

S.**<u>250/175</u>** - 5K000M0

Length = belt width -6 mm

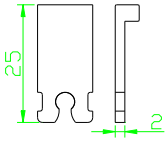

S.251/350/450 5S000M0

Length = belt width -46 mm

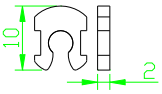

SPARKS BELTING COMPANY

9. Construction and Installation Instruction

A: Construction
B: Construction examples
C: Thermal expansion/contraction
D: Material description
E: Chemical resistance
F: Installation and maintenance
G: Malfunctioning

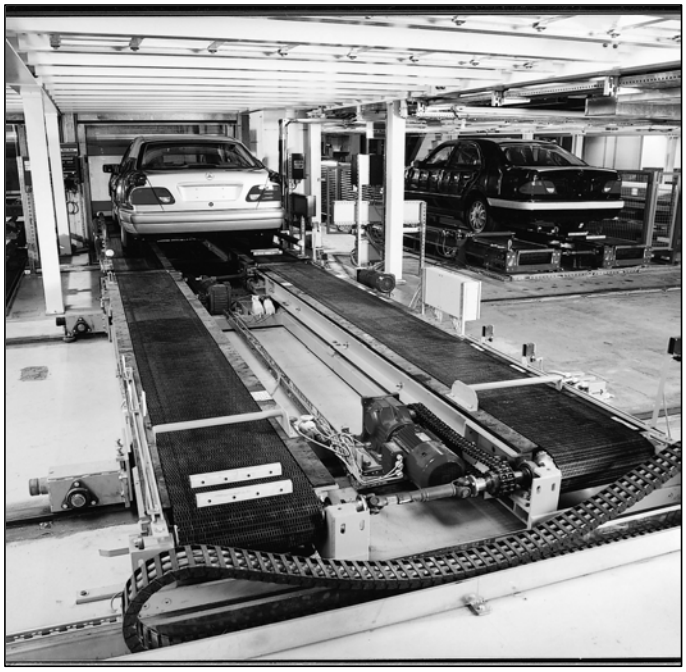

Construction (A)

Construction of conveyors using
Dura-Lock modular belts

The construction and assembly of conveyor systems using Dura Lock modular belts are not significantly different from conveyor systems utilising other belt types. There are, however, certain points which we would like to emphasise. Therefore we have prepared general assembly guidelines, which we hope will be helpful when designing and constructing a conveyor system.
Note that belt widths under 19.69” have a tolerance of ± 1/8” and belt widths over 19.69” have a tolerance of ± ¼”.

There are 3 diagrams illustrating horizontal conveyor systems.

Fig. 1 relates to short lightly loaded conveyor systems. This type of construction means the belt is tightened and tensioned by adjustment at one or both shafts. This conveyor system can be used in a reversing operation. It is important to be aware of temperature fluctuations when using this type of construction. In the event of low temperatures, the belt will contract significantly. At high temperatures the belt will expand, which could result in poor or even complete lack of engagement from the sprockets on the drive wheels.

Fig. 2 relates to longer and more heavily loaded conveyor systems. This conveyor system cannot be used in a reversing operation. The first support after the drive wheel ensures the best possible engagement.
The second support should be located in a position where the weight of the belt "sag" between the first and the second support is sufficient to maintain the correct belt tension. This ensures continuous positive engagement from the sprockets on the drive wheel. Another advantage of this type of construction, which features a series of belt supports, is that it is possible to accommodate any belt contraction/expansion by fluctuating the degree of belt "sag" between all other supports.

Fig. 3 is similar to the conveyor system shown in the middle diagram. The only exception is that it can be used in a reversing operation. However, it cannot handle the same heavy loads.

Fig. 1

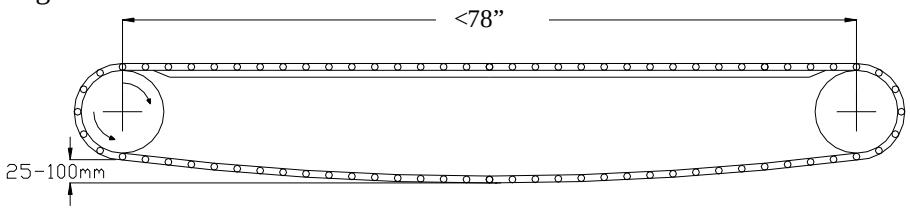

Fig. 2

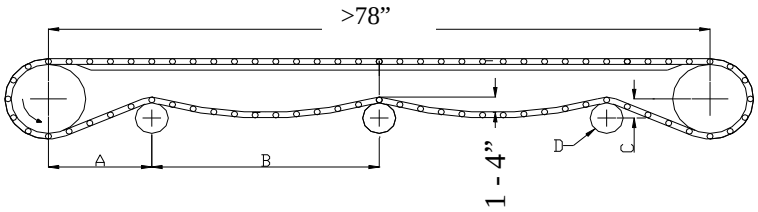

Fig. 3

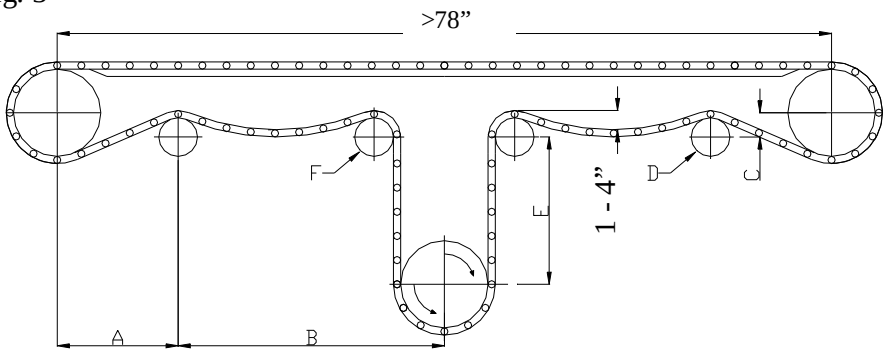

A = 8” – 12”
B = Min. 40” - max.10% of the centre distance.
C = 0 – 2“
D = S. 12 min. Ø .75“ - S. 25 min. Ø 2“ - S. 50 min. Ø 4”
E = S. 12 min. 2“ - S. 25 min. 3“ - S. 50 min. 6”
F = S. 12 min. Ø .75” - S. 25 min. Ø 4”- S. 50 min. Ø 6”

Construction examples (B)

Construction of conveyors using
Dura-Lock modular belts

There are 2 diagrams illustrating elevator conveyor systems.

Fig. 1 shows a very common construction. The drive sprocket is at the top of the elevator system.
The first support after the drive sprocket ensures the best possible engagement. The second support should be located in a position, so that the weight of the belt "sag" between the first and the second support is sufficient to maintain the correct belt tension. This ensures continuous positive engagement from the sprockets on the drive sprocket. If there is insufficient distance between the first two supports, the tensioning belt "sag" should be moved to the area between the second and the third support. When provision has been made for adequate tensioning by following the above points, the belt can then be enclosed and allowed to run inside the conveyor framework for the remainder of the return leg.

At the point where the belt runs negatively, between the horizontal and incline (E-radius), it can be held in position and retained at the sides by the synthetic guide rails. Another option is the use of the hold-down segment built into the underside of the belt. These segments attach onto a suitable rail incorporated in the conveyor support bed.

Fig. 2 shows a similar elevator system. It is constructed in the same way.

In some exceptional cases, more tightening/tensioning may be necessary.
This can be achieved by using counter-weights or springs.

Construction example (mm)

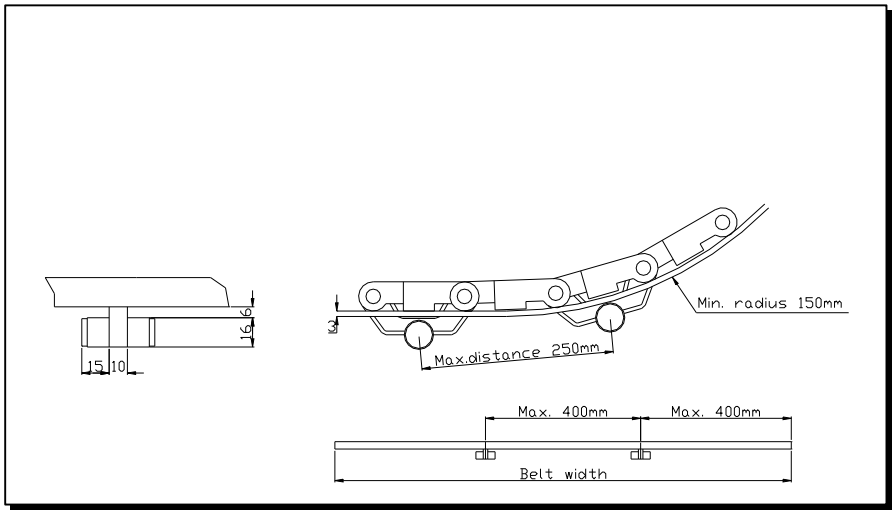

Fig. 1

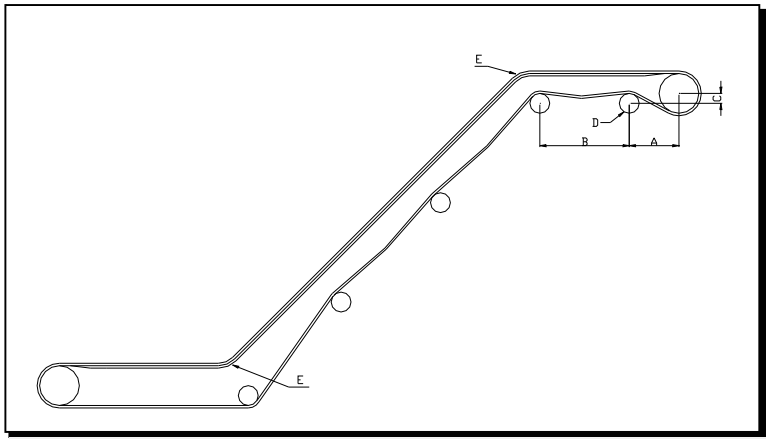

Fig. 2

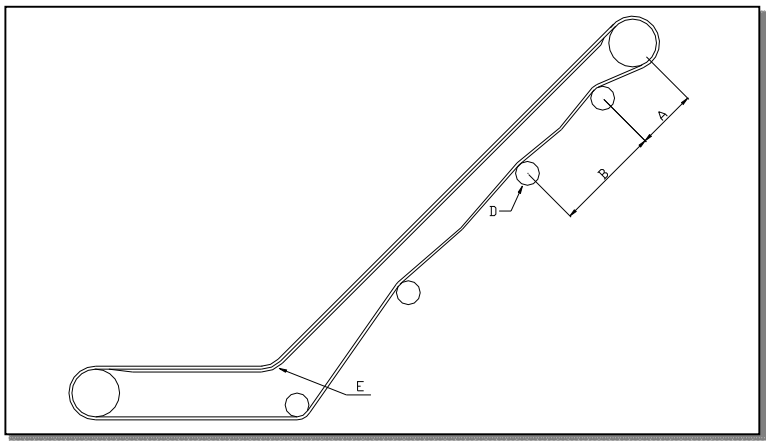

A = 7.87” – 11.81”
B = Minimum 40” – max 10% of the center distance.
C = 0 – 2”
D = S.25 minimum diameter = 2”. S.50 minimum diameter = 4”
E = Minimum radius = 6”

Sprockets						
Nominal belt width	Standard load			Heavy load		
inch	Series 12	Series 25	Series 50	Series 12	Series 25	Series 50
1.97	2	1	1	2	1	1
3.94	3	2	2	3	2	2
5.91	3	2	2	4	3	2
7.87	3	3	2	5	4	3
9.84	5	3	3	7	5	3
11.81	5	4	3	8	6	4
13.78	7	5	4	9	7	5
15.75	7	6	4	10	8	6
17.72	9	6	5	12	9	6
19.69	11	7	5	13	10	7
23.62	13	8	6	15	12	8
27.56	15	10	8	19	15	10
31.5	17	11	8	20	16	11
35.43	19	12	9	23	18	12
39.37	21	14	10	25	20	14
47.24	25	16	12	30	24	16
59.06	31	20	15	38	30	20
70.87	37	24	18	45	36	24
82.68	45	28	21	53	42	28
94.49	49	32	24	60	48	32
118.11	60	40	30	75	60	40
141.73	72	48	36	90	72	48
157.48	80	54	40	100	80	54
	Max. space between sprockets	Max. space between sprockets	Max. space between sprockets	Max. space between sprockets	Max. space between sprockets	Max. space between sprockets
	2"	3"	4"	1.5"	2"	3"

Belt support						
Nominal belt width	Series 12		Series 25		Series 50	
inch	carry way	return way	carry way	return way	carry way	return way
1.97	2	2	2	2	2	2
3.94	2	2	2	2	2	2
5.91	2	2	2	2	2	2
7.87	3	2	3	2	2	2
9.84	3	2	3	2	3	2
11.81	3	2	3	2	3	2
13.78	4	3	4	3	3	3
15.75	4	3	4	3	3	3
17.72	4	3	4	3	3	3
19.69	5	3	5	3	4	3
23.62	5	3	5	3	4	3
27.56	6	4	6	4	5	4
31.5	7	4	7	4	5	4
35.43	7	4	7	4	5	4
39.37	8	5	8	5	6	5
47.24	9	5	9	5	7	5
59.06	11	6	11	6	8	6
70.87	13	7	13	7	9	7
82.68	15	8	15	8	11	8
94.49	17	9	17	9	12	9
118.11	21	11	21	11	15	11
141.73	25	13	25	13	17	13
157.48	29	15	29	15	19	15
For other widths	Max. distance 3"	Max. distance 12"	Max. distance 3"	Max. distance 12"	Max. distance 9"	Max. distance 12"
When distance between shafts is more than 12', a roller is recommended on the return way.						

Thermal expansion / contraction (C)

All types of materials change dimensions when the temperature changes
Therefore you need to take this into consideration, when calculating a belt's dimensions and the frame constructions.

Below are the relevant factors for calculating a Dura Lock conveyor belt.

Material		Expansion/contraction in/ft/°F
Belt:		
Polypropylene	**PP**	0.0008
Polyethylene	**PE**	0.0015
Polyacetal	**POM**	0.0006
Wear strip:		
U and V profile	**PEHD**	0.0009
Frame material:		
Aluminium		0.00014
Stainless steel		0.00007

Formula:

E = L x (T2 - T1) x K
C = L x (T2 - T1) x K
E = Expansion (in)
C = Contraction (in)
L = Length/width of belt (ft)
T1 = Normal temperature (70°F)
T2 = Working temperature
K = Coefficient

Example:

55' long, 53" wide, PP. Normal temp. 70° Working temp. 185 °F.

Length: E = 55 x (185-70) x 0.0008
E = 5.06"

Width: E = 4.42 x (185 - 70) x 0.0008
E = .406"

SERVICE FACTOR (SF)		
Unloaded starts & load applied gradually		1.0
Frequent starts under load, more than 1/hr.	+ 0.2	
Belt speed greater than 100ft/min.	+ 0.2	
Elevating conveyors	+ 0.4	
Pusher conveyors	+ 0.2	
SF total		

All friction values are theoretical and may not reflect the working conditions. For new belt on new wear strips, the values will in most cases be higher to begin with. The theoretical values are in any respect given under optimal condition. For more details please contact Sparks Belting.

Coefficient of start-up friction between wear strip and belt								
Wearstrip material	Belt material							
	Polypropylene				Polyethylene		Acetal POM	
	Smooth			xx Abrasive		Smooth		Smooth
	Wet		Dry	Wet	Dry	Wet	Dry	Wet	Dry
PEHD	0.09		0.11	-	-	-	-	0.09	0.08
UHMW	0.11		0.13	-	-	0.24*	0.32*	0.10	0.10
Steel	0.26		x 0.26	0.31	0.31	0.14	0.15	0.18	0.19
xx = Contact Sparks Belting					x = Not recommended over 50 ft/min.				

*Note that the wear will increase with the belt speed. It should be expected to be extensive for speeds greater than 50 ft/min

Coefficient of friction between product and belt						
Material:	Polypropylene		Polyethylene		Acetal POM	
	Smooth		Smooth		Smooth	
	Wet	Dry	Wet	Dry	Wet	Dry
Glass	0.18	0.19	0.08	0.09	0.13	0.14
Metal	0.26	0.32	0.10	0.13	0.19	0.20
Plastic	0.11	0.17	0.08	0.08	0.13	0.15
Cardboard	-	0.21	-	0.15	-	0.13

Material description (D)

Polyethylene:

Thermal plastic with a weight mass of approx 0.92. grams/cm³.
Suitable for use in cold areas.
Temperature range from -100°F to + 151°F.
High chemical resistance.
FDA approved.
Tough yet flexible material with a high impact strength.

Polyethylene Plus:

Thermal plastic with a weight mass of approx. 0.92 grams/cm³.
Suitable for use in medium temperature areas.
Temperature range from -4°F to + 176°F.
High chemical resistance.
FDA approved.
Same characteristics as Polyethylene, with a 30% larger tensile strength as well as a reduced impact strength.

Polypropylene:

Thermal plastic with a weight mass of approx. 0.92 grams/cm³.
Suitable for use in higher temperature areas.
Temperature range from +41°F to +212°F.
High chemical resistance.
FDA approved.
A strong material with a medium tensile strength, low impact strength at low temperatures.

Polypropylene heat stabilized:

Thermal plastic with a weight mass of approx. 0.92 grams/cm³.
Suitable for use in high temperature areas.
Temperature range from +41°F to +248°F.
High chemical resistance.
FDA approved.
Medium tensile strength, low impact strength at low temperatures.

Polypropylene Composite:

Thermal plastic with a weight mass of approx. 1.25 grams/cm³.
Suitable for use in high temperature areas.
Temperature range from -4°F to +266°F.
High chemical resistance.
A strong and consistently stable material. Extremely high tensile strength, but has increased friction between the support and the belt. Low impact strength at low temperatures.

Polypropylene antistatic:

Thermal plastic with a weight mass of approx. 0.98 grams/cm³.
Suitable for use in areas requiring electrical diversion.
Temperature range from +41°F to +212°F.
High chemical resistance.
Not FDA approved
Tensile strength as normal polypropylene.

Polyacetal (POM):

Thermal plastic with a weight mass of approx. 1.4 grams/cm³.
Suitable for use in both warm and cold areas.
Temperature range from -45°F to + 203°F.
Has a limited resistance to certain chemicals. If in doubt, please contact Sparks Belting.
FDA approved.
Consistently stable material with a high tensile strength and high wear resistance.
Low friction between belt and support.
Low impact resistance at low temperatures.

Polyacetal antistatic:

Thermal plastic with a weight mass of approx. 1.4 grams</cm³.
Suitable for use in areas requiring electrical diversion.
Temperature range from -45°F to +203°F.
Not FDA approved
Other characteristics, are the same as polyacetal.

Nylon 6:

Thermal plastic with a weight mass of approx. 1.08 grams/cm³.
Suitable for use in both warm and areas.
Temperature range from -49°F to +230°F.
High chemical resistance. Not suitable in damp areas at high temperatures.
FDA approved.
Tough yet flexible material with a high tensile strength as well as a high impact strength.

Nylon 6.6:

Thermal plastic with a weight mass of approx. 1.1 grams / cm³.
Suitable for use in both warm and cold areas.
Temperature range from -49°F to +302°F.
High chemical resistance, though not suitable for use in very damp areas at high temperatures.
Not FDA approved
Tough yet flexible material with a high tensile strength as well as a high impact strength.

Nylon antistatic:

Thermal plastic with a weight mass of approx. 1.1 grams/cm³.
Suitable for use where electrical diversion is required.
Temperature range from -49°F to +230°F.
High chemical resistance. Not suitable in wet areas.
Not FDA approved
Tough yet flexible material with a high tensile strength as well as a high impact strength.

Fire retarding polypropylene:

Thermal plastic with a weight mass of approx. 0.98 grams/cm³.
Suitable for use in fire hazard areas, as in microwave ovens and the like.
Temperature range from +41°F to +248°F.
High chemical resistance.
Flammability VO (3,2 mm).
FDA approved.
Strong material with medium tensile strength. Low impact strength at low temperatures.

Friction material:

Thermal plastic with a weight mass of approx. 1.14 grams/cm³.
Suitable for use in both warm and cold areas.
Temperature range from -13°F to +176°F.
High chemical resistance.
FDA approved.
Soft material with high friction, low tensile strength.
Suitable to put on the surface of PE and PP belts.
Used for belts with slight inclination.

Silicone and teflon material:

An additive added to polyethylene and polypropylene.
This material prevents products from freezing or sticking to the belt.
FDA approved.
The characteristics of the basic material are not changed essentially.

Metal detectable:

An additive added to polypropylene.
The compound is designed to be detected by metal detectors.
Sensibility degrees may vary with customer's equipment.
The material complies with FDA regulations for use in food processing and packaging.

Chemical resistance (E)

The chemical resistance of plastic materials.

The values in the following tables are guideline values. Factors such as filling material, temperature, concentrations, stress, stress time etc. can alter these values dramatically. Therefore no guarantee can be given for the correctness of said values. The values are valid at an ambient temperature of 68°F, and unless otherwise stated, with strong concentrations.

Explanation of symbols:

+ : resistant:	None or only negligible changes in weight (< 0.5%). No changes in mechanical characteristics.
± : qualified resistance:	After a period of time, significant changes in weight and mass (0.5 - 5.0%). Possible discoloration and reduction in strength and ductility. Qualified usability, though only when dealing with simple material requirements.
- : inconstant:	It is rapidly subjected to serious attack, and changes in weight and mass (> 5%), and critical in strength and ductility. Not recommended for use.
%: concentration:	If value is not given it is because no test results are available from our suppliers.

Plastic material Chemical	%	POM	PE	PP	PA
Acetaldehyde	40	+	+	+	
Acetaldehyde	12	+	+	+	+
Acetic acid	10	±	+	+	+
Acetic acid	80	-	+	+	+
Acetone	100	+	+	+	±
Alcohol	15	+	+	+	+
Allyl alcohol	100	+	+	+	
Aluminium chloride	10	+	+	+	±
Ammonia water	10	+	+	+	±
Ammonium chloride		+	+	+	±
Ammonium chloride	10	+	+	+	+
Aniline	100	+	+	+	±
Benzene	100	+	+	-	-
Benzyl alcohol	100	+	+	+	±
Boiled salt - cf. Sodium chloride	10	+	+	+	+
Boracic acid	10	+	+	+	±
Bromine acid	50	-	+	+	
Butanol	100	+	+	+	+
Butyl acetate	100	+	+	-	+
Calcium carbonate		+	+	+	+
Calcium chloride - aqueous	10	+	+	+	+
Calcium chloride - with sprit	20	+	+	+	±
Calcium hydroxide		+	+	+	+
Calcium carbonate - Carbon dioxide		+	+	+	+

Plastic material Chemical	%	POM	PE	PP	PA
Caustic potash soln	10	+	+	+	+
Caustic potash soln	10	+	+	+	+
Caustic potash soln	50	+	+	+	+
Cellulose acetate		+	+	+	-
Citric acid	10	+	+	+	+
Chalk cf. -					
Carbon disulphide	100	+	+	+	-
Chlorine gas	100	-	+	-	
Chlorine water		-	+	+	-
Chloro-benzene	100	+	+	+	+
Chloroform	100	-	-	+	+
Chrome acid	10	-	+	+	-
Copper chloride		+	+	+	±
Copper sulphate		+	+	+	±
Diesel fuel	100	+	+	+	+
Dioxane	100	±	+	±	+
Di -vinyl chloride	100	+	-	+	
Edible oil		+	+	+	
Ethyl acetate	100	+	+	+	+
Ethyl alcohol	96	+	+	+	+
Ethyl ether	100	+	+	+	+
Formaldehyde - Flourine, dry		-	-	-	+
Freon 11		+	+	-	
Freon 12			+	-	
Freon 22			+	-	
Freon 113			+	-	
Glycerol	90	+	+	+	+

Plastic material Chemical	%	POM	PE	PP	PA
Heptane	100	+	+	+	+
Hexane	100	+	+	+	+
Hydrargyrum	100	+	+	+	+
Hydrochloric acid	10	-	+	+	+
Hydrochloric acid	2	-	+	+	+
Hydrofluoric acid	40	-	+	+	-
Hydrogen peroxide	0.5	+	+	+	+
Hydrogen peroxide	1	+	+	+	±
Hydrogen peroxide	3	+	+	+	±
Hydrogen peroxide	10	+	+	+	±
Hydrogen peroxide	30		+	+	±
Hydrogen sulphide	2	-	+	+	
Iodine/Iodine - pot. -					-
Iron - 111 - Chloride		+	+	+	+
Isopropanol	90	+	+	+	+
Kerosine	100	+	+	+	+
Lactic acid	10	+	+	+	+
Leaching solution -					
0.1 % free chlorine		-	+	+	-
Lead sugar		+	+	+	+
Liquid butane		+	+	+	+
Magbesium chloride -					
Aqueous	10	+	+	+	+
Manganese sulphate	10	+	+	+	+
Mercury chloride -					
Aqueous	5	+	+	+	+
Methanol	98	+	+	+	+
Metal acetate	100	+	+	+	+
Methylethylketone	100	+	+	+	+
Methylene chloride	100	-	+	+	+
Mineral oil	100	+	+	+	+
Nitric acid	10	-	+	+	+
Nitric acid -					
Concentrated	65	-	+	-	+
Nitrobenzene	100	+	+	+	±
Oleic acid -					
Concentrated	40	+	+	+	+
Oxalic acid	10	-	+	+	±

Plastic material Chemical	%	POM	PE	PP	PA
Ozone		-	+	+	±
Petrol		+	+	+	±
Phenol, melted	100	-	+	+	±
Phenol, aqueous	10	-	+	+	±
Phosphoric acid	10	+	+	+	+
Phosphoric acid -					
Concentrated	80	-	+	+	+
Potassium	10	+	+	+	±
Pot. Bichromate	5		+	+	
Pot. Permanganata	1	+	+	+	
Salt cake -					
CF Sodium sulphate					±
Sea water	100	+	+	+	+
Silicone oil		+	+	+	+
Soap solution	1	+	+	+	
Soda lve, aqueous	50	+	+	+	
Soda lve, aqueous	10	+	+	+	+
Soda -					
cf. Sodium carbonate					
Sodium bisulphate	10	-	+	+	
Sodium carbonate	10	+	+	+	
Sodium hydroxide -					
cf. Sode lve					
Sodium sulphate	10	+	+	+	
Solution	3		+	+	
Sulphur dioxide		+	+	+	±
Sulphuric acid	98	-	-	-	-
Sulphuric acid	10	+	+	+	+
Sulphuric fuming		-	-	-	-
Terachlorocarbon	100	+	-	-	
Tetraline	100	+	+	+	+
Thionyl chloride	100	+	-	-	
Toluene	100	+	+	+	+
Trichloroethylene	100	+	-	+	±
Vinyl benzene	100	+	+	+	+
Water, cold		+	+	+	+
Wine		+	+	+	+
Wax, melted		+	+	+	+

Installation and maintenance (F)

Installation and maintenance instructions for Dura-Lock conveyor belts

Although belts made by Sparks Belting are easy to install and maintain, there are some points which should be observed:

Sprockets:

1. Dura Lock sprockets can be supplied for two types of shafts:

A - Square shaft.

- Ensure that the sprockets are aligned, so that the gear teeth are not displaced.
- For sprockets with lateral control, the middle sprocket should be fixed and the others allowed to float freely.
- For sprockets without lateral control, spacers can be mounted between the sprockets to prevent them from moving sideways.
- An acetal plastic (POM) retainer ring is also supplied with a 6 mm stainless centre screw which should be screwed down into the shaft. The groove for the screw should be made with a drill, file or right-angle grinder (depth 1/32" – 1/16").

B - Round shaft with key way (ANSI / DIN standard).

- Ensure that the sprockets are aligned, so that the gear teeth are not displaced.
- For sprockets with lateral control, the middle sprocket should be fixed and the others allowed to float freely.
- For sprockets without lateral control, spacers can be mounted between the sprockets to prevent them from moving sideways.
- Retainer rings are not supplied for sprockets with round shaft. The sprockets can be fixed in position by making a threaded hole in the hub above the keyway.

2. The sprockets are normally supplied in acetal plastic (POM), but are also available in Nylon (PA6), and Polypropylene (PP) in cases where aggressive substances are used. (When in doubt, please contact Sparks Belting.)

3. Wherever possible, the drive sprocket should be located between the supports.

4. The number of drive sprocket and supports can be seen from the table (page78).

5. For correct dimensions and specifications, refer to the drawings and tables for the respective belt types.

6. Clean the sprockets regularly, as the accumulation of dirt on the sprockets can result in poor, or a complete lack of, engagement with the belt.

Belt

1. Installation:

When installing a Dura Lock belt, it is advantageous to ensure that the sprockets engage correctly, although not strictly necessary since the sprockets engage during operation. One should be careful to ensure that the side of the belt has a straight edge before securing with the plastic rod when assembling a belt. The plastic rod used for assembling the belt is equipped, either a) with a head at one end or b)with clips.

a) After installation, any excess plastic rod should be cut off 1/32" – 1/16" from the belt's outer edge. Soldering/plugging can be carried out with a soldering iron. If a soldering iron is not available, the plastic rod can be heated using, for instance, a lighter, after which soldering can be carried out with a soft press.

b) After installation, all rods are being locked, with the clips supplied with the belt

2. Maintenance:

In order to minimise wear and to prevent the belt from slipping it should be cleaned regularly.
Slipping of the belt can be caused by the belt being insufficiently tightened. If the conveyor is equipped with a tightening device, then this should be used to try to tighten the belt. If this is not sufficient, the belt should be shortened (see trouble-shooting table).
If the belt continues to slip, then contact Sparks Belting.
New belts stretch, and it is therefore necessary to shorten the new belt shortly after operation has begun. This will usually be necessary after approx. 50 hours of operation.

3. Shortening/replacing damaged modules:

Always ensure that there are spare plastic rods and modules for the belt. Three extra rods are supplied with every new belt. Spare modules in standard widths of 7.87", or other customized widths can be supplied by Sparks Belting upon request.
When shortening/replacing damaged modules, the plastic rod can be removed most easily by cutting it as close to the edge of the belt as possible. The part which has been cut off can then be removed using a knife or screw-driver, and the rest of the rod can be knocked out using a punch.
When shortening the belt, excess modules should be removed. In the case of damaged modules, these should be removed and replaced by new modules.
The belt can then be reassembled with new rods as described above in the section on installation.
In case of emergency, when no spare rods are available, the link closest to the edge can be removed so that an old rod can be used. This must be done only in cases of emergency. If more extensive repairs are required, then contact Sparks Belting for a quotation. In the event of extensive damage, it may be more economical to buy a new belt.

Malfunction (G)

If the belt is malfunctioning

If the belt is not properly aligned:

Test / check: That the drive shaft and the flange roller are adjusted correctly.

If the belt pulls to one side:

Test / check: That the shaft is adjusted correctly; that the belt mounting stands rectangular.
That the belt is tightened to the same degree on both sides.

If the edges of the belt wear:

Test / check: That the shaft is adjusted correctly; that the gap between the edges of the belt and the frame is wide enough when the operating temperature is at its highest and that the belt's supporting structure stands rectangular. That the shafts are locked in place so that they cannot move from side to side (if necessary, use retainer rings).

If the belt jumps a notch on the sprockets:

Test / check: That the sag on the belt is adjusted so that it engages the sprockets correctly (tighten as little as possible). That the products / materials do not collect on the return track.

If the belt is subject to severe wear and tear:

Test / check: That it is not being operated with excessive amounts of gravel, sand or similar products.
That the belt is operating with a uniformly distributed load.
That the belt is supported correctly. That the belt is not running at excessive speeds.
That the correct wear strips are being used. That the belt´s supporting structure is level.

If the sprockets are subject to severe wear and tear:

Test / check: That the shafts are not twisted or bent, and that they are adjusted correctly.
That the sprockets have been fitted correctly and that there are enough of them. That the belt is not being run too quickly or too tightly. That the belt is not being operated with excessive amount of gravel, sand or similar products.

If the rods are subject to severe wear and tear:

Test / check: That the belt is not being operated with excessive amounts of gravel, sand or similar products. That the belts is not being run too quickly. That the materials do not become congested on the belt.

If the rods work themselves loose from the belt:

Test / check: That the gap between the belt edges and the frame is wide enough when the operating temperature is at its highest. That the rods are fitted correctly and locked.

If the wearstrip are subject to severe wear and tear:

Test / check: That the belt is being operated with the correct type of wear strip. That the belt is not too tight.

If the edges of flights become worn:

Test / check: That there is enough space on the return track.

If the flights break:

Test / check: That the flights do not hit against the frame. That blockage do not occur at the in-feed.

If the belt becomes discoloured or is attacked by chemicals:

Test / check: That correct cleaning procedures are followed. That white belts are not exposed to strong sunlight (they turn a yellowish colour - use dark coloured belts instead!). That the operating temperature is not too high.